MULTICAL® 602 & ULTRAFLOW® 54 Heat Meter

FEATURES

- Ultrasonic flow sensor
- Large dynamic range
- Exceptionally accurate
- Longevity
- Supplied by 24VAC, 230V or battery
- Data logging for 1392 hours, 460 days, 36 months and 15 years
- Built-in Real Time Clock
- Complies with EN 1434:2004 Class C and MID
- Room for two extra plug-in modules
- Top module: CE+CV outputs and M-Bus
- Base module: M-Bus, LonWorks and pulse inputs for electricity and water meters

MULTICAL® 602 and ULTRAFLOW® 54 are used for measurement of heating in all water based plants with flow temperatures from 15°C to 130°C and with ULTRAFLOW® 54 between qp 1.5 m³/h and qp 100 m³/h.

The meter is simple to install, read and test. MULTICAL® 602 and ULTRAFLOW® 54 contributes to keeping the annual operating costs at a minimum with its unique combination of high measuring accuracy and long lifetime.

MULTICAL® 602 receives volume pulses from the connected ULTRAFLOW® 54 and calculates the energy for every predetermined water volume. The energy calculation includes temperature measurements in flow and return as well as correction for density and heat content according to EN 1434.

MULTICAL® 602 and ULTRAFLOW® 54 can be supplied by either 24 VAC or battery.

MULTICAL® 602 can be supplied with two internal modules – a top module with clock backup, pulse outputs or M-Bus and a base module with M-Bus, or LonWorks. Furthermore, the base module includes two additional pulse inputs for connection of water and electricity meters, making it possible to collect all consumption data with one single automatic data reading.

ULTRAFLOW® 54 is a static flow sensor based on the ultrasonic measuring principle for use in heating installations where water is used as the energy conveying medium.

The flow is measured using bidirectional ultrasonic technique based on the transit time method, with proven long-term stability and accuracy. Two ultrasonic transducers are used to send the sound signal both against and with the flow direction.

The ultrasonic signal travelling with the flow direction reaches the opposite transducer first. The time difference between the two signals can be converted into a flow velocity and thus a volume.

ULTRAFLOW® is available up to qp 1,000 m³/h.

Contents

1 CALCULATOR FUNCTIONS

1.1 Energy calculation

MULTICAL® 602 calculates energy based on the formula in EN 1434-1:2004, in which the international temperature scale from 1990 (ITS-90) and the pressure definition of 16 bar is used.

The energy calculation can in a simplified way be expressed as:
Energy = V x ΔΘ x k.

V is the supplied water volume
ΔΘ is the temperature difference measured
k is the thermal coefficient of water

The calculator always calculates energy in [Wh], and then it is converted into the selected measuring unit.

E [Wh] =	V x ΔΘ x k x 1,000
E [kWh] =	E [Wh] / 1,000
E [MWh] =	E [Wh] / 1,000,000
E [GJ] =	E [Wh] / 277,780
E [Gcal] =	E [Wh] / 1,163,100

1.2 Application

MULTICAL® 602 operates with 9 different energy formulas, E1...E9, that are all calculated in parallel in connection with each integration no matter how the meter is configured.

In connection with heating the following energy calculations are most often used:

E1=V1(T1-T2)	Heating energy (V1 in flow or return)
E8=m³ x T1	(Flow pipe)
E9=m³ x T2	(Return pipe)

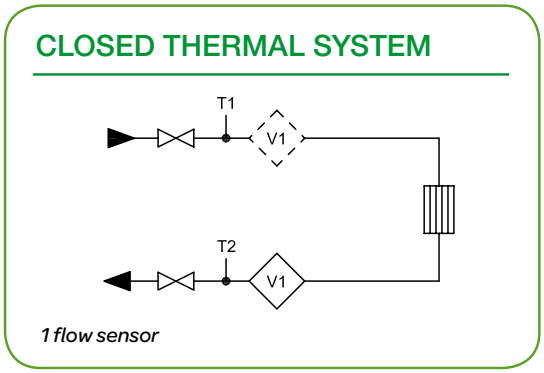

1.3 Min. and max. flow and power

MULTICAL® 602 registers minimum and maximum flow and power on a monthly as well as on a yearly basis. The registrations which appear from the display or can be read via data communication include max. and min. flow and power values, all with date indication.

All max. and min. values are calculated as largest and smallest average respectively of a number of current flow or power measurements. The average period used for all calculations is selected in the interval 1…1440 min.

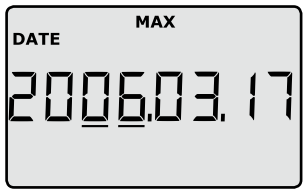

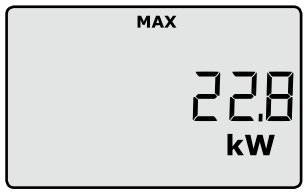

1.4 Temperature measurement

MULTICAL® 602 is delivered with Pt500 sensors in 2-wire versions.

The measuring circuit includes a high resolution analog/digital converter with a temperature range of 0.00…185.00°C.

In addition to current temperatures for the energy calculation average temperatures on a yearly and monthly basis can also be displayed.

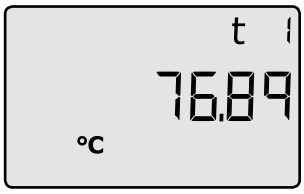

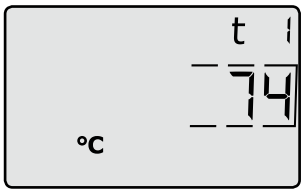

1.5 Display functions

MULTICAL® 602 is equipped with a clear LC display including 8 digits, units of measurement and information panel. In connection with energy and volume readings 7 digits and the units of measurement to match are used, whereas 8 digits are used when e.g. meter number is read. As a starting point the display shows accumulated energy. When the push buttons are activated the display reacts immediately by calling other readings. The display automatically returns to accumulated energy reading 4 minutes after the latest activation of the push buttons.

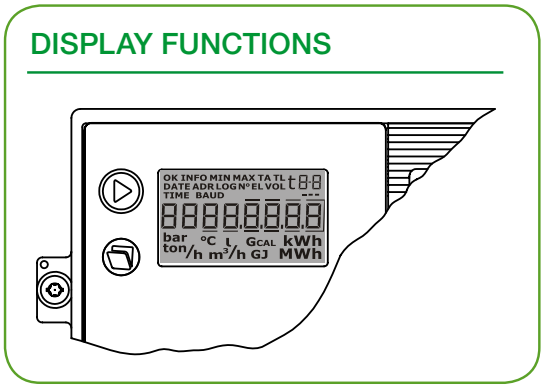

The upper push button is used to switch between the primary readings. The consumers typically use the first primary readings in connection with self-reading for billing purposes.

The lower push button is used to show secondary information on the selected primary reading.

1.6 Set/reset function

The set/reset function of MULTICAL® 602 makes it possible to change a number of parameters by means of the two buttons on the meter's front. The following parameters can be changed:

- Date
- Hour
- Input A (preset of register)
- Input B (preset of register)
- Meter no. of Input A
- Meter no. of Input B
- Pulse value for Input A
- Pulse value for Input B
- Primary M-Bus address
- Operating hour counter (reset)
- Info-event counter (reset)

As the installation seal is broken, the change can only be made by the energy supplier.

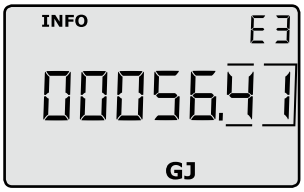

1.7 Info codes

MULTICAL® constantly monitors a number of important functions, e.g. power supply and temperature sensors. Should a serious error occur in the measuring system or in the installation, a flashing "info" will appear in the display while the error exists. The "Info" panel will automatically disappear when the error has been corrected.

An Info Event Logger indicates how many times the info code has been changed.

The info logger stores the latest 50 changes, of which 36 can be displayed.

Info code	Description
0	No irregularities
1	Supply voltage connected after cut off
4	T2 sensor outside range, short-circuited or cut off
8	T1 sensor outside range, short-circuited or cut off
16	Flow sensor V1, datacomm error, signal too low or wrong flow direction
2048	Flow sensor V1, wrong meter factor
4096	Flow sensor V1, signal too low (Air)
16384	Flow sensor V1, wrong flow direction

1.8 Data loggers

MULTICAL® 602 contains a permanent memory (EEPROM), where the results of a number of various data loggers are stored. The meter contains the following data loggers which can be read on the display or via serial data. Availability of log data in display depends on selected display settings.

Data logging interval	Data logging depth	Logged value
Yearly logger	15 years	Counter registers (as seen on the display)
Monthly logger	36 months	Counter registers (as seen on the display)
Daily logger	460 days	Consumption (increase)/day
Hourly logger	1392 hours	Consumption (increase)/hour
Programmable data logger (option)	1080 loggings (e.g. 45 days´ hour loggings or 11 days‘ 15 min. loggings)	Up to 40 optional registers and values
Info logger	50 events	Date, Info code, E1, E2, Time

1.9 Pulse inputs VA and VB

MULTICAL® 602 has two extra pulse inputs, VA and VB, to collect and accumulate pulses remotely, e.g from cold-water meters and electricity meters. The pulse inputs are physically placed on the ”base modules”. The pulse inputs VA and VB function independently of the other inputs/outputs.

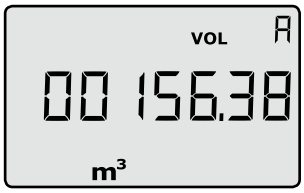

1.10 Voltage supply

MULTICAL® 602 is available with 24 VAC mains module as default, Optional 230V or Battery. The supply modules are exchangeable without breaking the verification seal.

1.11 Plug-in modules

Plug-in modules can be added to MULTICAL® 602 both in the calculator top (top modules) and in the base unit (base modules), in this way the meter can adapt to various applications and data reading methods.

1.12 Programming and testing

METERTOOL for MULTICAL® 602 is a Windows® -based software which includes all facilities for calculator programming. If the software is used together with VERIFICATION EQUIPMENT for MULTICAL® 601 & 602, the calculator can be tested.

1.13 Tariff functions

MULTICAL® 602 has 2 extra registers TA2 and TA3 to accumulate energy parallelly to the main register based on a programmed tariff condition. No matter which tariff type you select the tariff registers will be displayed as TA2 and TA3. The main register is always accumulated, irrespective of the selected tariff function, as it is considered the legal billing register. Tariff conditions TL2 and TL3 are monitored before each integration. If the tariff conditions are fulfilled, the consumed cooling energy is accumulated in either TA2 or TA3, as well as the main register.

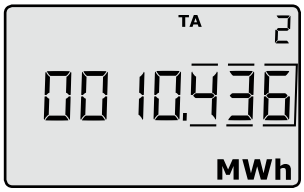

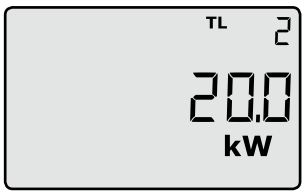

2 ELECTRICAL DATA

Typical accuracy

Calculator . . . . . .E_C ±(0.15 + 2/ΔΘ)%
Sensor set . . . . . .E_T ±(0.4 + 4/ΔΘ)%
Flow sensor . . . . . E_F ±(1 + 0.01 x qp/q)%

Supply voltage . . . . . .3.6 VDC ± 0.1 V
Battery . . . . . .3.65 VDC, D-cell lithium
Stand-by current. . . . . < 85 µA

Replacement interval

Mounted on wall. . . . . 10 years @ t_{BAT} < 30°C
The replacement interval is reduced when using data modules, frequent data communication or high ambient temperature
Mains supply . . . . . 24 VAC ±50%, 50/60 Hz
Insulation voltage . . . . . 4 kV
Power supply . . . . . < 1W

Backup supply . . . . . Integral super-cap eliminates operational stop-down due to short-term power cuts
EMC data. . . . . Domestic and light industrial

Calculator data

Display . . . . . LCD – 7 (8) digits with a digit heigth of 7.6 mm
Resolution . . . . . 9999.999 – 99999.99 – 999999.9 – 9999999
Energy units . . . . . MWh
Temperature range . . . . . θ: 2...180°C
Differential range. . . . . ΔΘ:3...170 K

Data logger (Eeprom)

Standard . . . . .1392 hours, 460 days, 36 months, 15 years, 50 info codes
Option . . . . . Data loggers with larger depth and hour interval

Clock/calendar

Standard . . . . . Clock calendar, leap-year compensation, target date

Data communication

Standard . . . . .KMP protocol with CRC16 used for optical communication and for top and base modules
Power in temperature sensors . . . . .< 10 µW RMS

Temperature measurement

Sensor inputs T1, T2
Measuring range. . . . . 0.00…185.00°C
Max. cable lengths
Pt500, 2-wire . . . . . 2 x 0.25 mm²: 10 m

Pulse inputs VA and VB VA: 65-66 and VB: 67-68	Water meter connection FF(VA) and GG(VB) = 01...40	Electricity meter connection FF(VA) and GG(VB) = 50...60
Pulse input	**680 kΩ pull-up to 3.6 V**	**680 kΩ pull-up to 3.6 V**
Pulse ON	**< 0.4 V for > 0.1 sec.**	**< 0.4 V for > 0.1 sec.**
Pulse OFF	**> 2.5 V for > 0.1 sec.**	**> 2.5 V for > 0.1 sec.**
Pulse frequency	**< 1 Hz**	**< 3 Hz**
Electrical isolation	**No**	**No**
Max. cable length	**25 m**	**25 m**

Pulse outputs CE and CV – via top module 67-08	
Type	**Open collector (OB)**
Pulse length	**32 msec. or 100 msec. (32 msec. for 67-06)**
External voltage	**5…30 VDC**
Current	**1…10 mA**
Residual voltage	**U_{CE} ≈ 1 V at 10 mA**
Electrical isolation	**2 kV**
Max. cable length	**25 m**

3 FLOW DATA HEAT

Nom. Flow qp [m3/h]	Nom. Diameter	Meter factor *) [imp./l]	Dynamic range qi:qp	qs :qp	Flow @125 Hz **) [m3/h]	Δp@qp [bar]	Min. cut off [l/h]
1.5	DN15 & DN20	100	1:100	2:1	4.5	0.22	3
2.5	DN20	60	1:100	2:1	7.5	0.03	5
3.5	DN25	50	1:100	2:1	9	0.07	7
6	DN25	25	1:100	2:1	18	0.2	12
10	DN40	15	1:100	2:1	30	0.06	20
15	DN50	10	1:100	2:1	45	0.14	30
25	DN65	6	1:100	2:1	75	0.06	50
40	DN80	5	1:100	2:1	90	0.05	80
60	DN100	2.5	1:100	2:1	180	0.03	120
100	DN100	1.5	1:100	2:1	300	0.07	200
150	DN150	1	1:100	2:1	450	0.02	300
250	DN150	0.6	1:100	2:1	750	0.055	500
400	DN150	0.4	1:100	2:1	1125	0.04	800
400	DN200	0.4	1:100	2:1	1125	0.01	800
400	DN250	0.4	1:100	2:1	1125	0.01	800

*) *The meter factor can be seen on the label on the side of the meter.*

**) *Saturation flow. Max. pulse frequency 128 Hz is maintained at higher flow rates.*

4 PRESSURE LOSS

Graph	qp [m3/h]	Nom. diameter	Kv *)	Q@0.25 bar [m3/h]
A	1.5	DN15 & DN20	3.2	1.6
B	2.5 & 3.5 & 6	DN20 & DN25	13.4	6.7
C	10 & 15	DN40 & DN50	40	20
D	25	DN65	102	51
E	40	DN80	179	90
F	60 & 100	DN100	373	187
G	150 & 250	DN150	1060	530
H	400	DN150	2000	1000
I	400	DN200 & DN250	4040	2020

*) $q=k_v x \sqrt{\Delta p}$

5 PRESSURE LOSS CHART

Δp ULTRAFLOW® 54

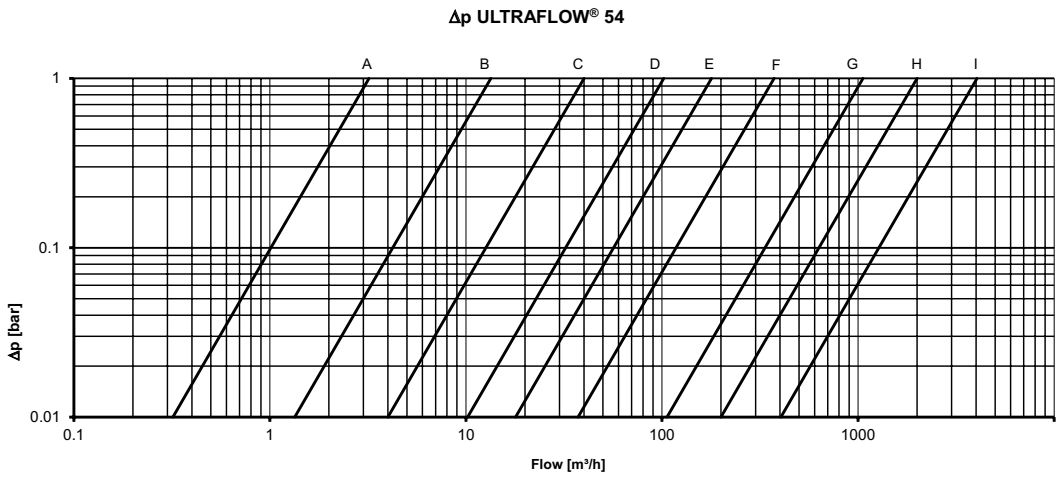

6 MECHANICAL DATA

Environmental class. . . . . Meets EN 1434 Class A
Ambient temperature. . . . . 5...55°C non condensing, closed location (indoor installation)
Protection class IP67
Calculator IP54
Flow sensor qp 1.5 to 100 . . . . . IP65
Flow sensor qp 130 to 400 . . . . . IP67
Storage temperature . . . . . -20...60°C (drained flow meter)
Weight
MULTICAL® 602. . . . . .0.4 kg excluding sensors and flow sensor
ULTRAFLOW® 54 . . . . . .See Dimension sketches on page 12-13
Flow sensor cable
(between flowpart and calculator). . . . . 2.5 m
Removable
Connection cables . . . . . ø3.5...6 mm
Supply cable . . . . . .ø5...10 mm

7 MATERIALS

MULTICAL® 602

Top cover . . . . . Thermoplastic, PC
Base unit . . . Thermoplastic, PP with thermoplastic elastomer TPE gaskets
Print box. . . . . Thermoplastic, ABS
Wall bracket . . . . . Thermoplastic, PC 30% GF

ULTRAFLOW® 54

Wetted parts

ULTRAFLOW® 54, qp 0.6 and 1.5 m³/h

Housing, gland . . . . . Dezincification resistant brass
Transducers . . . . . Stainless steel, W.no. 1.4401
Gaskets . . . . . EPDM
Reflectors. . . . . Thermoplastic, PES 30% GF and stainless steel, W.no. 1.4301
Measuring pipe. . . . . .Thermoplastic, PES 30% GF

ULTRAFLOW® 54, qp 2.5 to 40 m³/h

Housing, gland . . . . . Dezincification resistant brass
Housing, flange. . . . . Red brass, RG5 or stainless steel W.no. 1.4308 (see Order specification)
Transducers . . . . . Stainless steel, W.no. 1.4401
Gaskets . . . . . EPDM
Measuring pipe. . . . . .Thermoplastic, PES 30% GF
Reflectors. . . . . Stainless steel, W.no. 1.4301

Ultraflow 54 qp 150 to 400

Housing . . . . . stainless steel w.no. 1.4308
Transducer holder. . . . stainless steel w.no. 1.4308
Transducer . . . . . Titanium
Gasket . . . . . Fiber

Electronic housing

Base. . . . . .Thermoplastic, PBT 30% GF
Lid . . . . . .Thermoplastic, PC 10% GF

8 ORDER SPECIFICATIONS

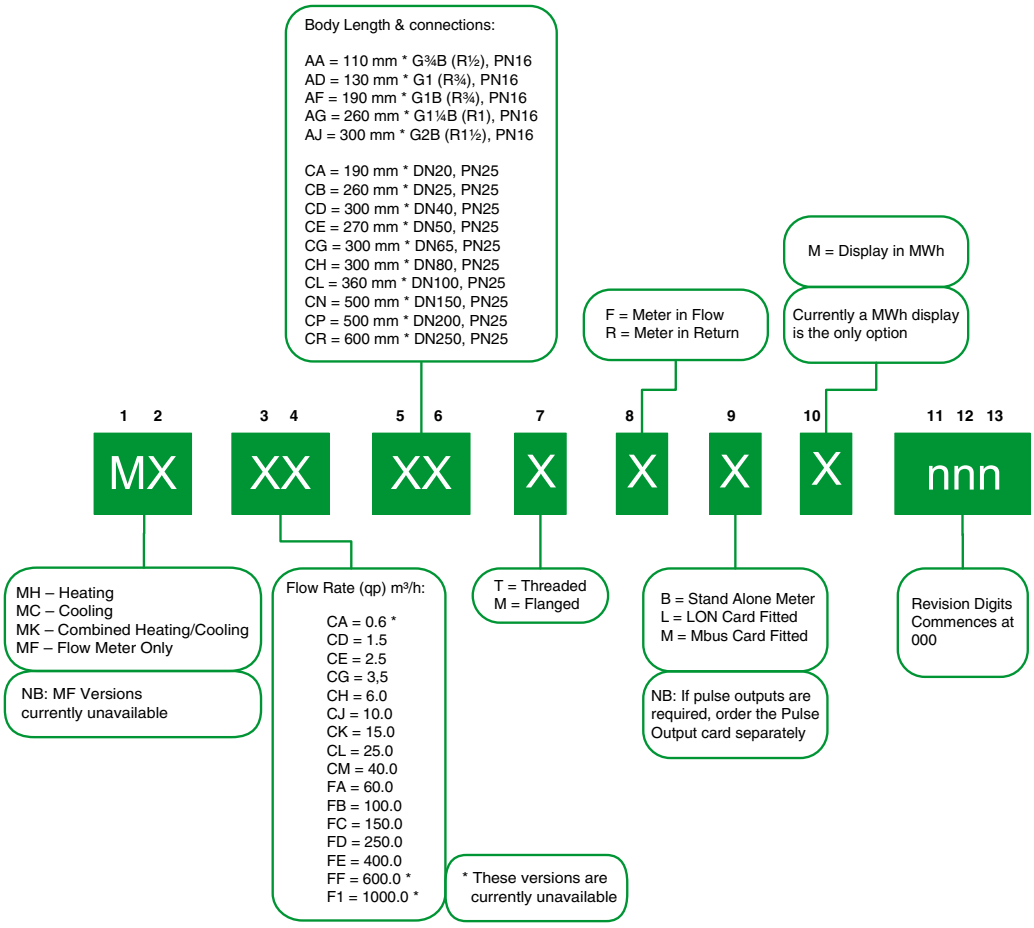

Type number	qp [m³/h]	q_i [m³/h]	q_s [m³/h]	Connection	Length [mm]	Meter factor [pulses/l]	Material
MX-CDAA-TXXM	1.5	0.015	3.0	G¾B (R½)	110	100	Brass
MX-CEAF-TXXM	2.5	0.025	5.0	G1B (R¾)	190	60	Brass
MX-CGAG-TXXM	3.5	0.035	7.0	G5/4B (R1)	260	50	Brass
MX-CHAG-TXXM	6.0	0.06	12	G5/4B (R1)	260	25	Brass
MX-CHCB-MXXM	6.0	0.06	12	DN25	260	25	Stainless steel
MX-CJAJ-TXXM	10	0.1	20	G2B (R1½)	300	15	Brass
MX-CJCD-MXXM	10	0.1	20	DN40	300	15	Stainless steel
MX-CKCE-MXXM	15	0.15	30	DN50	270	10	Stainless steel
MX-CLCG-MXXM	25	0.25	50	DN65	300	6	Stainless steel
MX-CMCH-MXXM	40	0.4	80	DN80	300	5	Stainless steel
MX-FACL-MXXM	60	0.6	120	DN100	360	2.5	Stainless steel
MX-FBCL-MXXM	100	1.0	200	DN100	360	1.5	Stainless steel
MX-FCCN-MXXM	150	1.5	300	DN150	500	1	Stainless steel
MX-FDCN-MXXM	250	2.5	500	DN150	500	0.6	Stainless steel
MX-FECN-MXXM	400	4	800	DN150	500	0.4	Stainless steel
MX-FECP-MXXM	400	4	800	DN200	500	0.4	Stainless steel
MX-FECR-MXXM	400	4	800	DN250	600	0.4	Stainless steel

9 SCHNEIDER PART NO DESCRIPTION

MASENSORA . ..... Set of Pocket Sensors 1.5 m Cable
MASENSORB . .....Set of Pocket Sensors 3.0 m Cable
MASENSORC . .....Set of Pocket Sensors 5.0 m Cable
MASENSORD . .....Set of Pocket Sensors 10.0 m Cable
MASENSORF . ..... Set of Direct Sensors 1.5 m Cable
MASENSORG . ..... Set of Direct Sensors 3.0 m Cable
MABATTDCELL . ..... D-Cell Battery
MA230VSUPPLY . ..... 230 Vac Supply
MA24VSUPPLY . ..... Replacement 24 Vac Supply
MAPT500NIPL ½ . ..... 1/2 R1/2 nipple for Pt500 Direct Probe
MAPT500NIPL ¾ . ..... 3/4 R3/4 nipple for Pt500 Direct Probe
MAPOCKET 65MM . ..... Replacement Sensor Pocket 65 mm
MAPOCKET 90MM . ..... Replacement Sensor Pocket 90 mm
MAPOCKET 140MM . ..... Replacement Sensor Pocket 140 mm
MAMTR BRACKET . ..... Replacement Mounting Bracket
MAPULSEOPTOPA . ..... RTC+ 66C compatibility+ Pulse O/Ps
MAPULSEOPTOPB . ..... RTC+ Hourly Data Logger+ 2 Pulse O/Ps
MAPULSEOPTOPC . RTC+ Hourly Data Logger+ 2 Pulse O/Ps +Scheduler
MAPULSEOPTOPD . ..... RTC+ 2 Pulse O/Ps+ Prog Data Logger
MAMBUSTOP . .....MBus Top Module
MAMBUSBASE . ..... Replacement Mbus Base Module
MALON BASE . ..... Replacement LON Base Module
MAOPTICUSB . ..... Optical USB Coupler
MAEXTKIT14 . .....HM Flow Meter Extension Kit UF14
MASECLABELA . ..... Sealing Labels for Calculator (Roll of 1000)
MASECLABELB . .....Sealing wire (400 m Length)
MASECLABELC . ..... Plastic Seals (1000 pcs)
MA4-20BASE . .....Analogue Output Base Module 4-20 mA
MAEXTKIT14+ . ..... Flow Meter Extension Kit+ UF14
MAEXTKIT_SPLIT. ..... Flow Meter Extension Kit SPLIT
MASWHWTOOL . .....HM Programming WH for Multical

10 MULTICAL® 602

DIMENSIONS (mm)

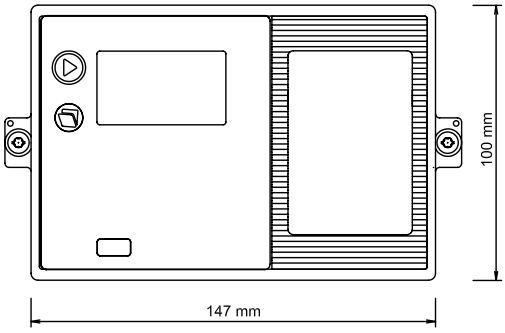

Front view

WALL MOUNTED

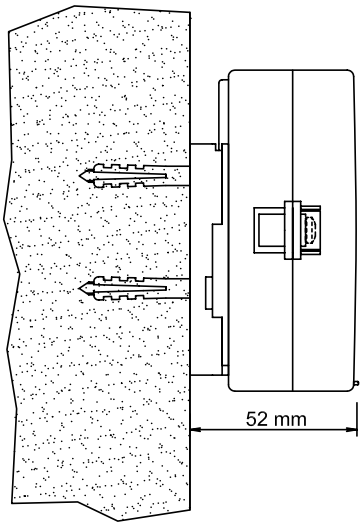

Side view

11 TEMPERATURE SENSORS DIMENSIONS

DIRECT SHORT SENSOR

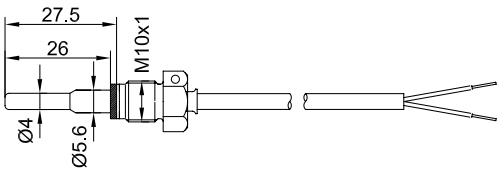

NV 12

Change-over nipples

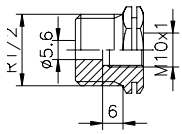

NV22

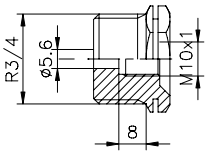

NV 27

R½ and R¾ thread according to ISO 7.1.

POCKET SENSOR

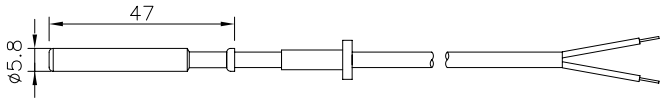

NV 12

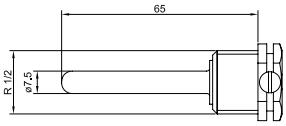

NV22 - 65 mm

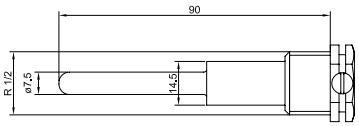

NV22 - 90 mm

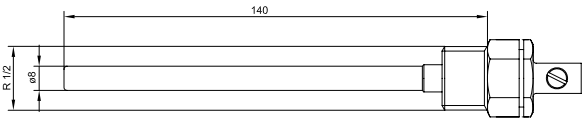

NV22 - 140 mm

12 FLOW SENSORS

ULTRAFLOW® 54, G¾ AND G1

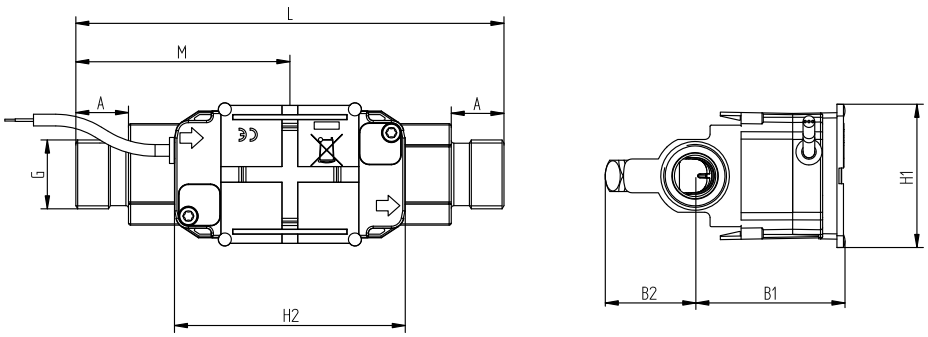

Thread ISO 228-1

Thread	L	M	H2	A	B1	B2	H1	App. weight [kg]
G¾	110	L/2	89	10.5	58	35	55	0.8
G1	130	L/2	89	20.5	58	35	55	0.9
G1(qp 1.5)	190	L/2	89	20.5	58	35	55	1.4
G1(qp 2.5)	190	L/2	89	20.5	58	36	55	1.3

ULTRAFLOW® 54, G5/4 AND G2

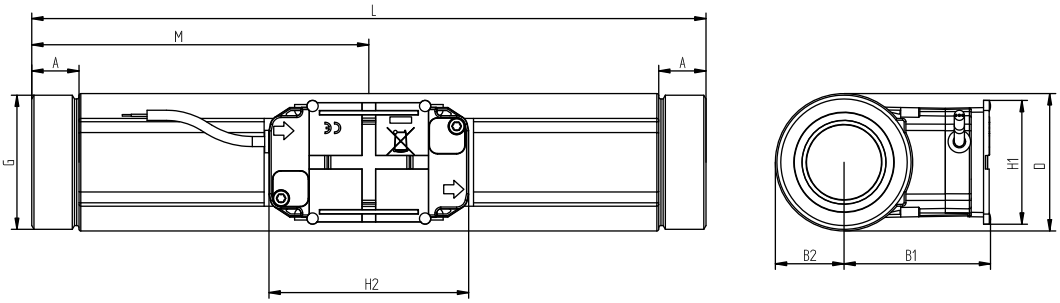

Thread ISO 228-1

Thread	L	M	H2	A	B1	B2	H1	App. weight [kg]
G5/4	260	L/2	89	17	58	22	55	2.3
G2	300	L/2	89	21	65	31	55	4.5

ULTRAFLOW® 54, DN20 TO DN50

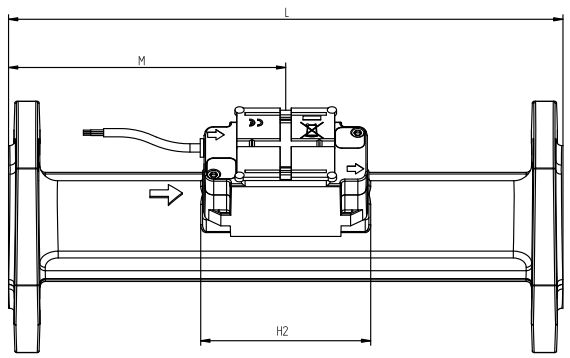

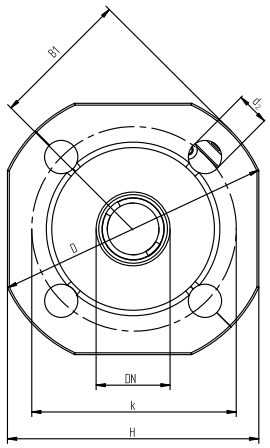

Flange EN 1092-3, type B, PN25

Nom. dia.	L	M	H2	B1	D	H	k	Bolts			App. weight [kg]
								No.	Thread	d_2	
DN25	260	L/2	89	58	115	106	85	4	M12	14	5.0
DN40	300	L/2	89	<D/2	150	136	110	4	M16	18	8.3
DN50	270	155	89	<D/2	165	145	125	4	M16	18	10.1

ULTRAFLOW® 54, DN65 TO DN80

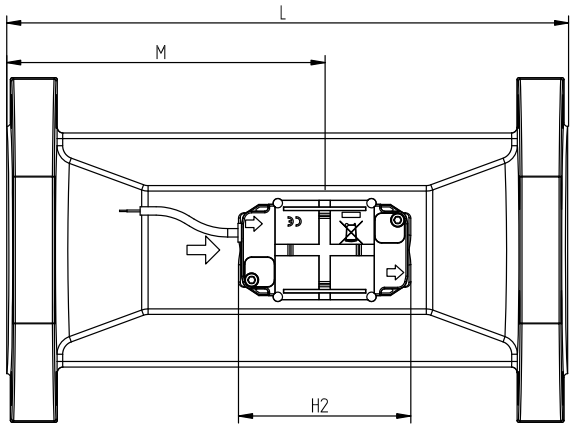

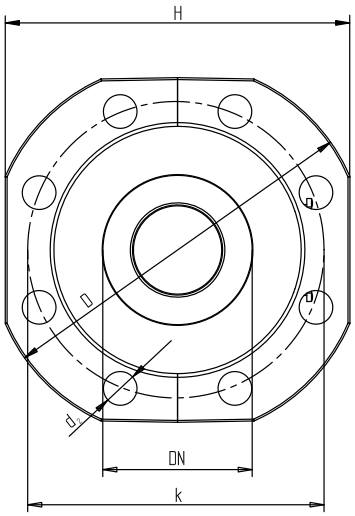

Flange EN 1092-3, type B, PN25

Nom. dia.	L	M	H2	B1	D	H	k	Bolts			App. weight [kg]
								No.	Thread	d_2	
DN65	300	170	89	<H/2	185	168	145	8	M16	18	13.2
DN80	300	170	89	<H/2	200	184	160	8	M16	18	16.8

ULTRAFLOW® 54, DN150 TO DN250

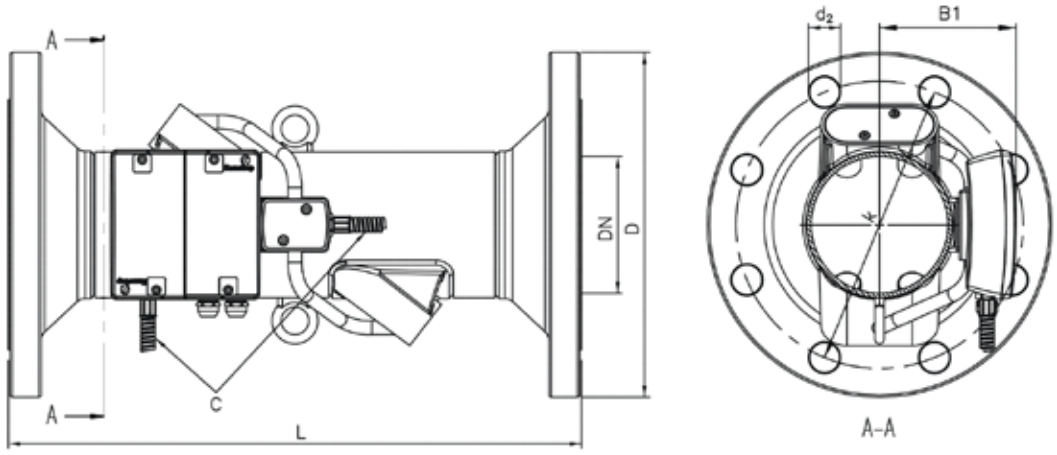

Flange EN 1092-3, type B, PN25

Nom. dia.	Nom. flow qp [m³/h]	L	D	k	B1	Bolts			Steel tube length C	Approx. weight [kg]
						No.	Thread	d_2		
DN150	150 & 250	500	300	250	119	8	M24	26	650	37
DN150	400	500	300	250	140	8	M24	26	625	36
DN200	400 & 600	500	360	310	166	12	M24	26	570	49
DN250	400 & 600	600	425	370	166	12	M27	30	570	79
DN250	1000	600	425	370	194	12	M27	30	500	75

13 INSTALLATION OF CALCULATORS

INSTALLATION

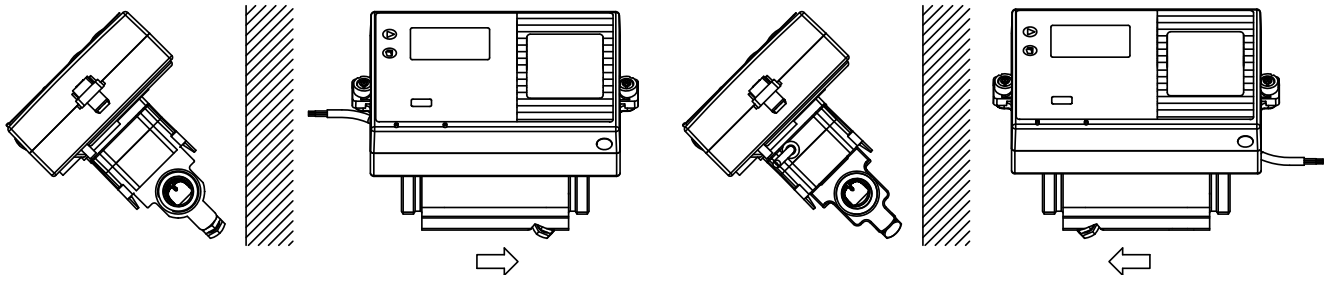

Flow from the left

Flow from the right

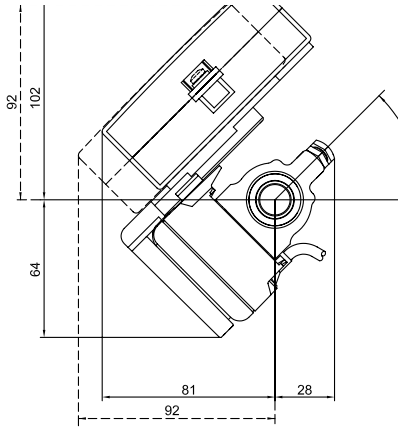

By means of the angle bracket MULTICAL® can be mounted in two positions.

Angle bracket type 3026-252 must be ordered separately.

14 INSTALLATION OF TEMPERATURE SENSORS

INSTALLATION

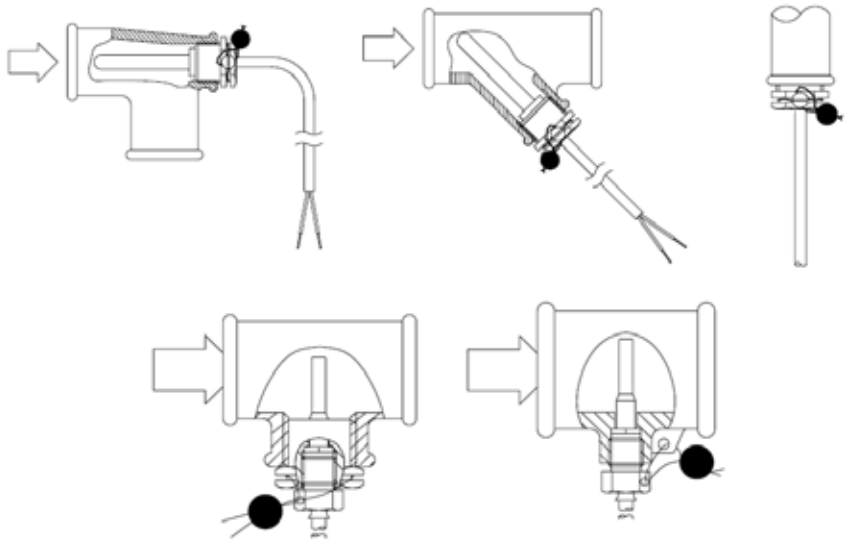

Temperature sensors may be mounted in any direction that best suits the actual installation environment.

15 MOUNTING OF FLOW SENSORS

Before mounting the flow sensor, flush the system thoroughly and remove protection plugs/plastic membranes from the flow sensor. Correct flow sensor position (flow or return pipe) appears from the front label placed on the MULTICAL® 602. The flow direction is indicated by an arrow on the side of the flow sensor.

Glands and gaskets must be mounted as shown on the drawing below.

Straight inlet: ULTRAFLOW® 54 requires neither straight inlet nor outlet to meet the Measuring Instruments Directive (MID) 2004/22/EC, OIML R75:2002 and EN 1434:2007. Only in case of heavy flow disturbances before the meter will a straight inlet section be necessary. We recommend to follow the guidelines in CEN CR 13582.

To prevent cavitation, the operating pressure at the ULTRAFLOW® 54 must be min. 1.5 bar at qp and min. 2.5 bar at q_s.

ULTRAFLOW® 54 must not be exposed to pressures below ambient pressure (vacuum).

MOUNTING

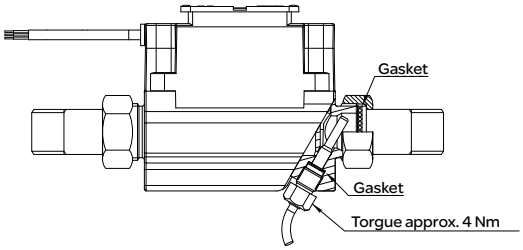

16 MOUNTING OF ULTRAFLOW® 54

MOUNTING, DN15 TO DN100

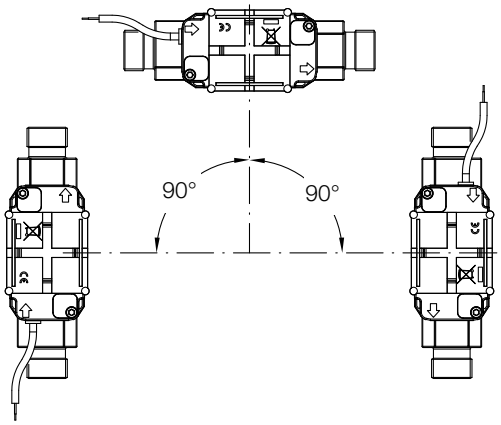

The ULTRAFLOW® 54 housing must vertically, horizontally or any angle in between.

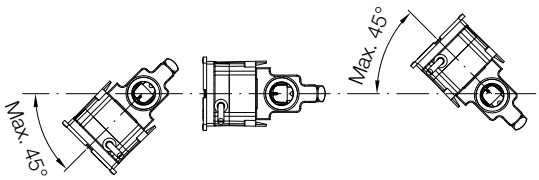

ULTRAFLOW® 54 may be turned up to 45° in relation to horizontal.

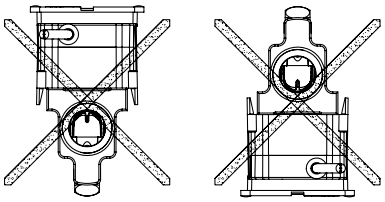

The ULTRAFLOW® 54 housing must not be mounted facing upwards or downwards.

MOUNTING, DN150 TO DN250

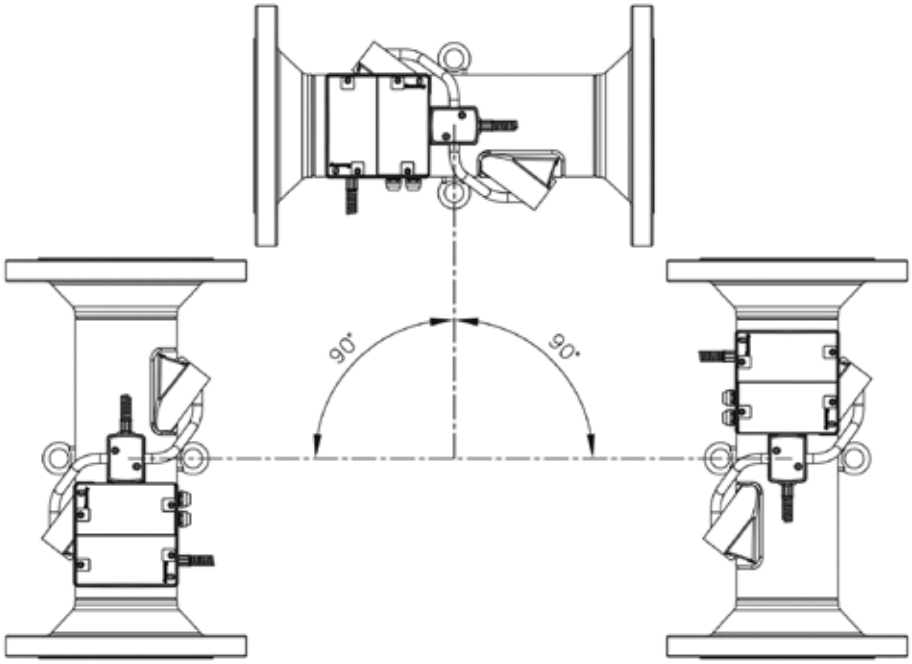

The ULTRAFLOW® 54 can be installed horizontally, vertically, or at an angle. It is normally installed horizontally, with the lifting rings oriented vertically. The ultrasound paths in the flow sensor tube will thus be vertical, which is optimal in connection with possible stratification of the medium.