CIMR-V7AZ

Varispeed V7

Sensorless vector in pocket size

- Nominal torque at 0.5 Hz
- Autotuning
- High carrier up to 14 khz
- Stop accuracy function.
- Integrated PID controller and bidirectional PID-out put
- Motor protection with PTC input
- Pulse input
- Standard digital operator with copy function
- Fieldbus: Modbus, DeviceNet, PROFIBUS, CANopen
- High speed motion bus: ML- II
- Plug-in PLC option unit. Total inverter access.
- CE, UL, and cUL marked

V7 IP65

- Compact size
- Easy wiring
- Built-in filter (Class B)

Customized software*

- The inverter software can be customized to meet specific application. Examples:
- Traverse sofware S-9381.

*For detailed information please refer to case software section.

Ratings

- 200 V Class single-phase 0.1 to 4 kW
- 200 V Class three-phase 0.1 to 7.5 kW
- 400 V Class three-phase 0.2 to 7.5 kW

System configuration

3G3IV-PCN329-E
Inverter to PC cable

CX-Drive

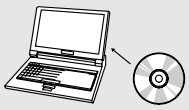

3G3IV-PEZZ8122_
DIN attachment

JVOP-144
Remote digital oper.
with potentiometer

JVOP-146
Remote digital oper.
with potentiometer

3G3IV-PCN126/326
Digital operator
extension cable

Line filter *See note

Varispeed V7

Braking accessories

LKEB_

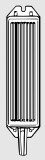

CDBR_B

ERF150WJ_

* V7 IP65 types are built-in filter inverters.

Communication unit *See note

PLC option unit *See note

* Option frames are needed for V7 IP65 type.

Specifications

Type designation

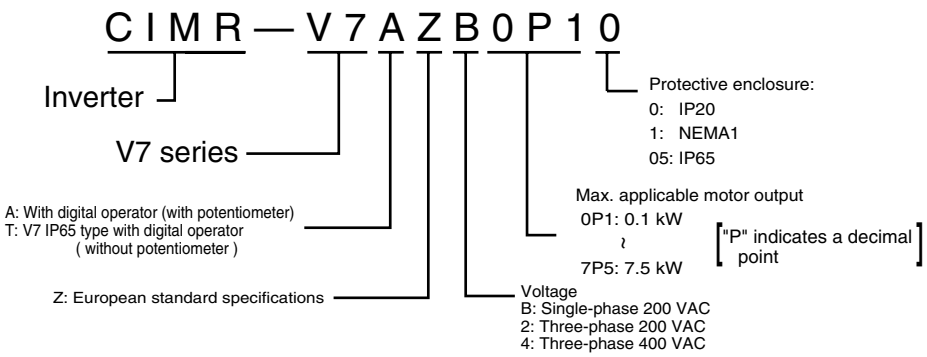

200 V class

IP20 single-phase: CIMR-V7AZ		B0P1	B0P2	B0P4	B0P7	B1P5	B2P2	B4P0
IP65 single-phase: CIMR-V7TZ		---	---	B0P405	B0P705	B1P505	B2P205	---
IP20 three-phase: CIMR-V7AZ		20P1	20P2	20P4	20P7	21P5	22P2	24P0
Maximum permissible motor output kW[1]		0.12	0.25	0.55	1.1	1.5	2.2	4.0
Output characteristics	Inverter capacity kVA	0.3	0.6	1.1	1.9	3.0	4.2	6.7
	Rated output current A	0.8	1.6	3.0	5.0	8.0	11.0	17.5
	Max. output voltage	Proportional to input voltage: 0..240 V						
	Max. output frequency	400 Hz						
Power supply	Rated input voltage and frequency	Single-phase 200..240 V 50/60 Hz 3-phase 200..230 V 50/60 Hz						
	Allowable voltage fluctuation	-15%..+10%						
	Allowable frequency fluctuation	+5%						

1. Based on a standard 4-pole motor for maximum applicable motor output. Select the inverter model within the allowable motor rated current

400 V class

IP20 three-phase: CIMR-V7AZ		40P2	40P4	40P7	41P5	42P2	43P0	44P0	45P5	47P5
IP65 three-phase: CIMR-V7TZ			40P405	40P705	41P505	42P205	43P005	44P005		
Maximum permissible motor output kW[1]		0.37	0.55	1.1	1.5	2.2	3.0	4.0	5.5	7.5
Output characteristics	Inverter capacity kVA	0.9	1.4	2.6	3.7	4.2	5.5	7.0	11.0	14.0
	Rated output current A	1.2	1.8	3.4	4.8	5.5	7.2	9.2	14.8	18.0
	Max. output voltage	Proportional to input voltage: 0..400 V								
	Max. output frequency	400 Hz								
Power supply	Rated input voltage and frequency	3-phase 380..460 VAC, 50/60 Hz								
	Allowable voltage fluctuation	-15%..+10%								
	Allowable frequency fluctuation	+5%								

1. Based on a standard 4-pole motor for maximum applicable motor output. Select the inverter model within the allowable motor rated current

Commom specifications

	Model number CIMR-V7AZ-□ CIMR-V7TZ-□	Specifications
Control functions	Control methods	Sine wave PWM (V/f control, sensorless vector control)
	Output frequency range	0.1..400 Hz
	Frequency tolerance	Digital set value: ±0.01% (-10..+50 ºC)
		Analogue set value: ±0.5% (25 ±10 ºC)
	Resolution of frequency set value	Digital set value: 0.01 Hz (<100 Hz), 0.1 Hz (>100 Hz)
		Analogue set value: 1/1000 of maximum frequency
	Resolution of output frequency	0.01 Hz
	Overload capability	150%/60 s
	Frequency set value	0..10 V (20 kΩ), 4..20 mA (250 Ω), 0..20 mA (250 Ω) Pulse train input, frequency setting value (selectable)
	Braking torque (short term peak torque)	Up to 200 W 150% or more 550 W to 1.1 kW 100% or more 1.5 kW 50% or more >1.5 kW 20% or more Continuous braking torque approx. 20% without, 150% with external braking resistor
Functionality	Binary inputs	7 freely programmable inputs
	Binary outputs	1 relay output, 2 freely programmable open collector outputs
	Analogue output	1 programmable analogue output (0..10 V)/pulse output
	Analogue inputs	2 analogue inputs, 0..10 V, 4..20 mA, 0..20 mA
	Braking/acceleration times	0.01..6000 s
	Display	Optionally frequency, current or set value
		Error and status LED
Protection functions	Motor overload protection	Electronic thermal overload relay
	Instantaneous overcurrent	Motor coasts to a stop at approx. 250% of inverter rated current
	Overload	Motor coasts to a stop after 1 minute at 150% of inverter rated output current
	Overvoltage	Motor coasts to a stop if DC bus voltage exceed 410 V (double for 400 V class)
	Undervoltage	Stops when DC bus voltage is approx. 200 V or less (double for 400 V class) (approx. 160 V or less for single-phase series)
	Momentary power loss	Following items are selectable: not provided (stop if power loss is 15 ms or longer), continuous operation if power loss is approx. 0.5 s or shorter, continuous operation
	Cooling fin overheat	Protected by electronic circuit
	Stall prevention level	Individual levels during accel/constant speed. Decel ON/OFF available. During decel enable/disable selectable.
	Cooling fan fault	Detected by electronic circuit (fan lock detection)
	Ground fault	Protected by electronic circuit (operation level is approx. 250% of rated output current)
	Power charge indication	RUN lamp stays ON or digital operator LED stays ON until the DC bus voltage becomes 50 V or less. (Charge LED is provided for 400 V)
Ambient conditions	Degree of protection	IP20, NEMA1, IP65
	Cooling	Self cooling for 200 V 0.1..0.4 kW (3 or single phase) and for 400 V 0.2..0.75 kW Cooling fan for 200 V 0.75 to 7.5 kW and for 400 V 1.5 to 7.5 kW
	Ambient temperature	Open air mounting: -10 ºC..50 ºC
		Wall mounting: -10 ºC..40 ºC
	Ambient humidity	95% (without condensation)
	Storage temperature	-20 ºC..+60 ºC (short-term temperature during transportation)
	Installation	Indoor (no corrosive gas, dust, etc.)
	Installation height	Max. 1000 m
	Vibration	10 to 20 Hz, 9.8 m/s^2 max; 20 to 50 Hz, 2 m/s^2 max

Digital operator

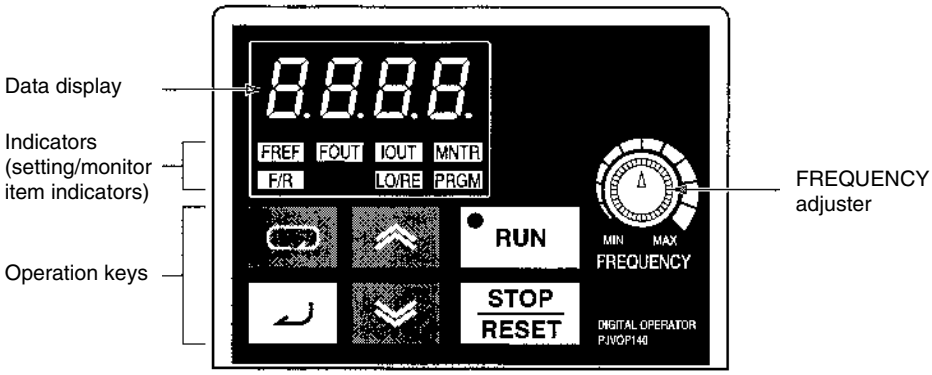

Appearance	Name	Function
	Data display	Displays relevant data items, such as frequency reference, output frequency, and parameter set values.
	Frequency adjuster	Sets the frequency reference within a range between 0 Hz and the maximum frequency. [1]
FREF	Frequency reference indicator	The frequency reference can be monitored or set while this indicator is lit.
FOUT	Output frequency indicator	The output frequency of the inverter can be monitored while this indicator is lit.
IOUT	Output current indicator	The output current of the inverter can be monitored while this indicator is lit.
MNTR	Multi-function monitor indicator	The values set in U01 through U10 are monitored while this indicator is lit.
F/R	Forward/reverse selection indicator	The direction of rotation can be selected while this indicator is lit when operating the inverter with the RUN key.
LO/RE	Local/remote selection indicator	The operation of the inverter through the digital operator or according to the set parameters is selectable while this indicator is lit. [2]
PRGM	Parameter setting indicator	The parameters in n001 through n179 can be set or monitored while this indicator is lit. [3]
	Mode key	Switches the simplified-LED (setting and monitor) item indicators in sequence. Parameter being set will be canceled if this key is pressed before entering the setting.
	Increment key	Increases multi-function monitor numbers, parameter numbers, and parameter set values.
	Decrement key	Decreases multi-function monitor numbers, parameter numbers, and parameter set values.
	Enter key	Enters multi-function monitor numbers, parameter numbers, and internal data values after they are set or changed.
RUN	RUN key	Starts the inverter running when the 3G3MV is in operation with the digital operator
STOP RESET	STOP/RESET key	Stops the inverter unless parameter n007 is set to disable the STOP key. Used to reset the inverter when an error occurs. [4]

1. V7 IP65 types have digital operator without frequency adjuster.
2. The status of the local/remote selection indicator can be only monitored while the inverter is in operation. Any RUN comand input is ignored while this indicator is lit.
3. While inverter is in operation, the parameters can be only monitored and only some parameters can be changed. Any RUN command is ignored while the parameter setting indicator is lit.
4. For safety reasons, the reset function cannot be used while an operation instruction (forward/reverse) is being input. Turn the operation instruction OFF before using this function.

Dimensions

IP 20 type 0.1 to 4 Kw

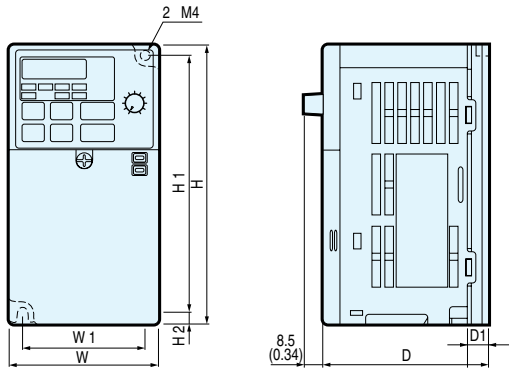

Figure 1

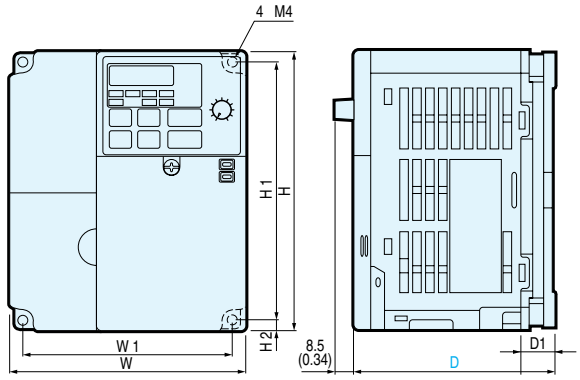

Figure 2

Voltage class	Max. applicable motor output kW	Inverter model CIMR V7AZ	Figure	Dimensions in mm							Weight kg	Cooling method
				W	H	D	W1	H1	H2	D1		
Three-phase 200 V	0.12	20P1	1	68	128	76	56	118	5	10	0.6	Self cooled
	0.25	20P2									0.6	
	0.55	20P4				108				42	0.9	
	1.1	20P7				128				62	1.1	Fan cooled
	1.5	21P5	2	108		131	96		5	64	1.4	
	2.2	22P2				140					1.5	
	4.0	24P0		140		143	128			71	2.1	
Single-phase 200 V	0.12	B0P1	1	68	128	76	56	118	5	10	0.6	Self cooled
	0.25	B0P2				76					0.7	
	0.55	B0P4				131				42	1.0	
	1.1	B0P7	2	108		140	96	118	5	64	1.5	Fan cooled
	1.5	B1P5				156	96				1.5	
	2.2	B2P2		140		163	128			71	2.2	
	4.0	B4P0		170		180	158				2.9	
Three-phase 400 V	0.37	40P2	2	108	128	92	96	118	5	16	1.0	Self cooled
	0.55	40P4				110				34	1.1	
	1.1	40P7				140				64	1.5	
	1.5	41P5				156					1.5	Fan cooled
	2.2	42P2									1.5	
	3.0	43P0		140		143	128			71	2.1	
	4.0	44P0									2.1	

IP20 / NEMA1 type 5.5/7.5 Kw

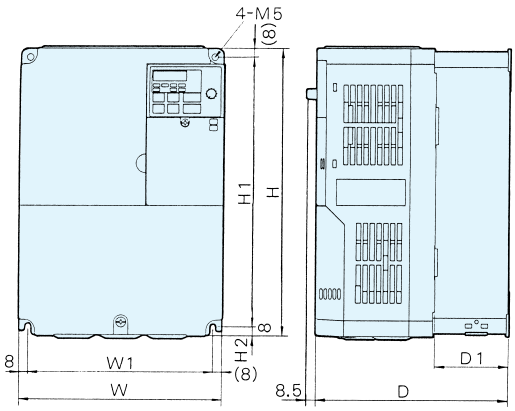

Figure 3

Voltage class	Max. applicable motor output kW	Inverter model CIMR - V7AZ	Figure	Dimensions in mm (inches)							Weight kg	Cooling method
				W	H	D	W1	H1	H2	D1		
Three-phase 200 V	5.5	25P5	3	180	260	170	164	244	8	65	4.6	Fan cooled
	7.5	27P5									4.8	
Three-phase 400 V	5.5	45P5		180	260	170	164	244	8	65	4.8	
	7.5	47P5									4.8	

IIP65 type 0.55 to 4 Kw

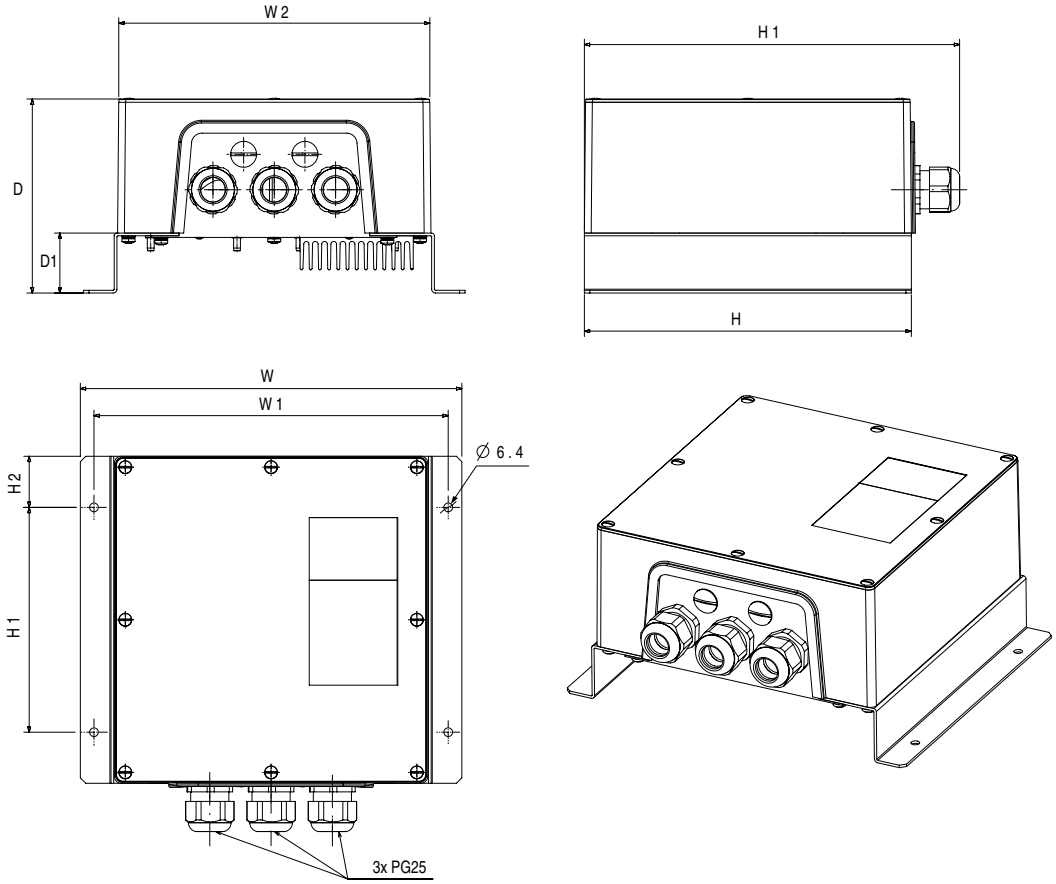

Figure 4

Voltage class	Max. applicable motor output kW	Inverter model CIMR V7TZ	Figure	Dimensions in mm									Weight kg	Cooling method
				W	H	D	W1	W2	H1	H2	H3	D1		
Single-phase 200 V	0.55	B0P405	4	280	240	142	260	228	165	38	275	44	3.4	Self cooled
	1.1	B0P705											4.3	Fan cooled
	1.5	B1P505											3.7	
	2.2	B2P205											4.2	
Three-phase 400 V	0.55	40P405		280	240	142	260	228	165	38	275	44	4.2	Self cooled
	1.1	40P705											4.3	Fan cooled
	1.5	41P505											3.7	
	2.2	42P205											3.7	
	3.0	43P005											4.1	
	4.0	44P005											4.1	

IP65 type 0.55 to 4Kw (with option frame accessory attached)

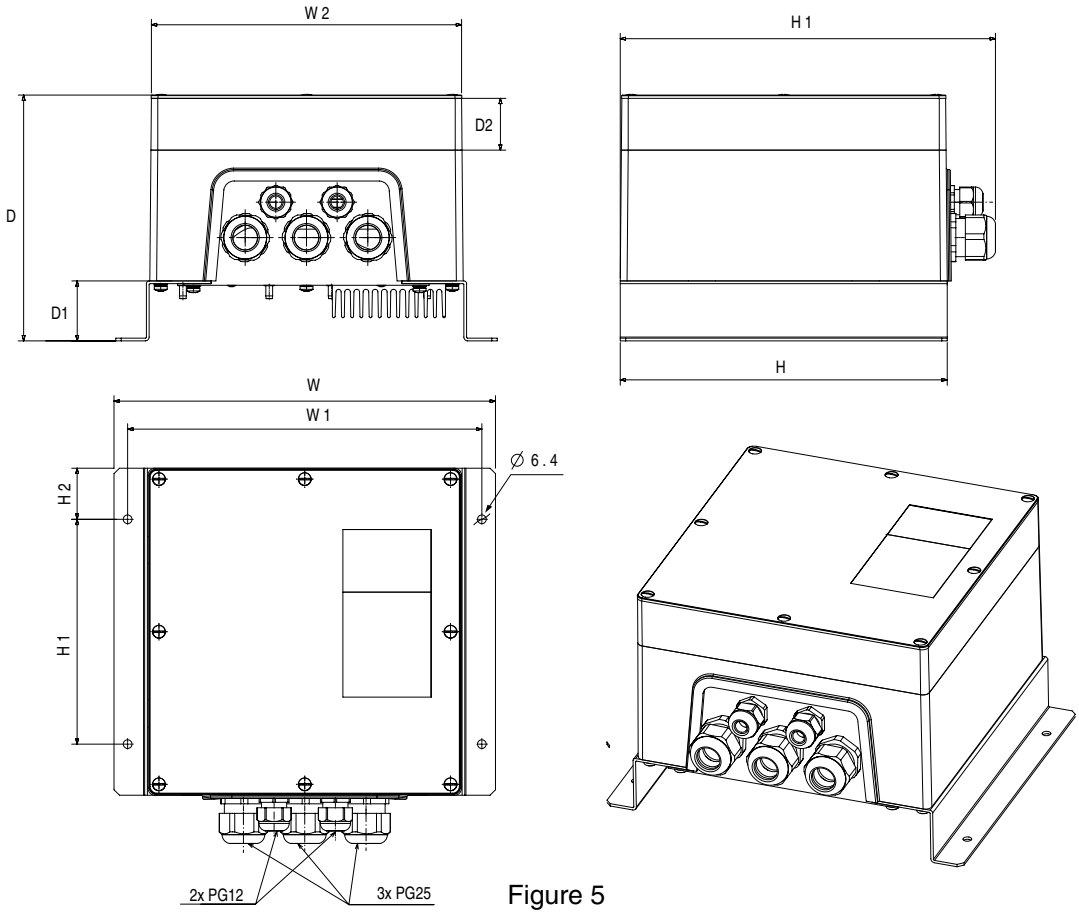

Figure 5

Voltage class	Max. applicable motor output kW	Inverter model CIMR V7TZ	Figure	Dimensions in mm										Weight kg	Cooling method
				W	H	D	W1	W2	H1	H2	H3	D1	D2		
Single-phase 200 V	0.55	B0P405	5	280	240	180	260	228	165	38	275	44	38	3.6	Self cooled
	1.1	B0P705												4.5	Fan cooled
	1.5	B1P505												3.9	
	2.2	B2P205												4.4	
Three-phase 400 V	0.55	40P405		280	240	180	260	228	165	38	275	44	38	4.4	Self cooled
	1.1	40P705												4.5	Fan cooled
	1.5	41P505												3.9	
	2.2	42P205												3.9	
	3.0	43P005												4.3	
	4.0	44P005												4.3	

Filters *

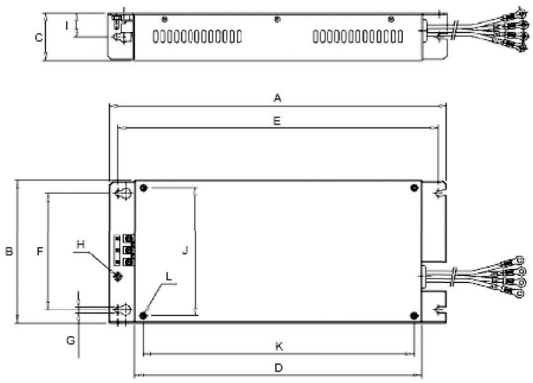

Schaffner model		Dimensions											
		A	B	C	D	E	F	G	H	I	J	K	L
3x200 V	3G3MV-PFI2010-SE	194	82	50	160	181	62	5.3	M5	25	56	118	M4
	3G3MV-PFI2020-SE	169	111	50	135	156	91	5.5	M5	25	96	118	M4
	3G3MV-PFI2030-SE	174	144	50	135	161	120	5.3	M5	25	128	118	M4
1x200 V	3G3MV-PFI1010-SE	169	71	45	135	156	51	5.3	M5	22	56	118	M4
	3G3MV-PFI1020-SE	169	111	50	135	156	91	5.3	M5	25	96	118	M4
	3G3MV-PFI1030-SE	174	144	50	135	161	120	5.3	M5	25	128	118	M4
	3G3MV-PFI1040-SE	174	144	50	135	161	150	5	M5	25	158	118	M4
3x400 V	3G3MV-PFI3005-SE	169	111	45	135	156	91	5.3	M5	22	96	118	M4
	3G3MV-PFI3010-SE	169	111	45	135	156	91	5.3	M5	22	96	118	M4
	3G3MV-PFI3020-SE	174	144	50	135	161	120	5	M5	25	128	118	M4
	3G3MV-PFI3030-SE	304	184	56	264	288	150	6	M5	28	164	244	M5

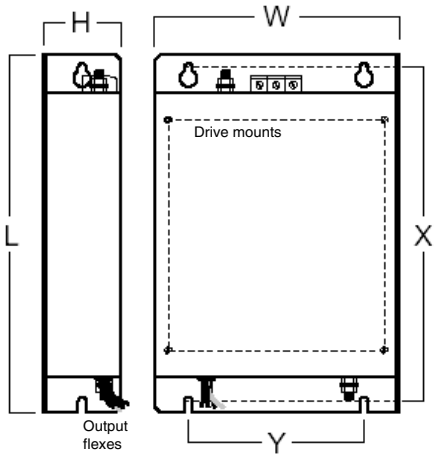

Rasmi model		Dimensions					
		W	H	L	X	Y	Inverter fixing
3x200 V	3G3MV-PFI2010-E	82	50	194	181	62	M5
	3G3MV-PF2020-E	111	50	169	156	91	M5
	3G3MV-PFI2030-E	144	50	174	161	120	M5
	3G3MV-PFI2050-E	184	56	304	288	150	M5
1x200 V	3G3MV-PFI1010-E	71	45	169	156	51	M5
	3G3MV-PFI1020-E	111	50	169	156	91	M5
	3G3MV-PFI1030-E	144	50	174	161	120	M5
	3G3MV-PFI1040-E	174	50	174	161	150	M5
3x400 V	3G3MV-PFI3005-E	111	50	169	156	91	M5
	3G3MV-PFI3010-E	111	50	169	156	91	M5
	3G3MV-PFI3020-E	144	50	174	161	120	M5
	3G3MV-PFI3030-E	184	56	304	288	150	M5

* V7 IP65 types are built-in filter inverters.

DIN rail mounting bracket

3G3IV-PZZ08122A

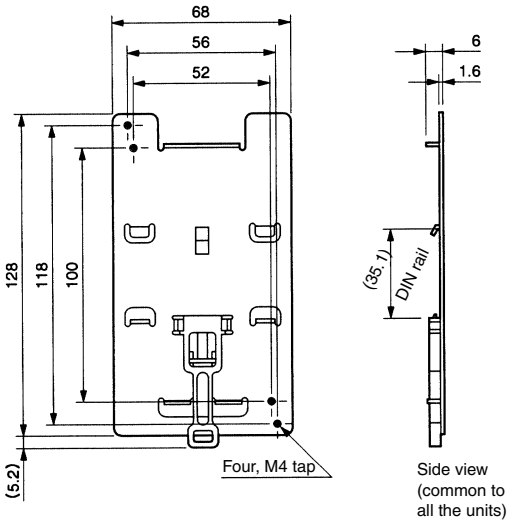

3G3IV-PZZ08122B

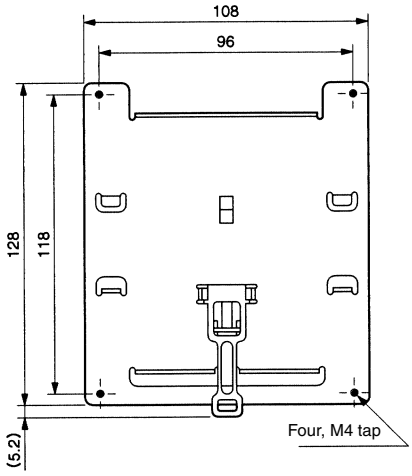

3G3IV-PZZ08122C

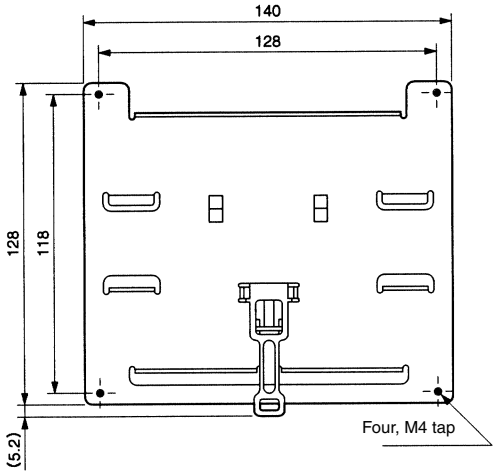

3G3IV-PZZ08122D

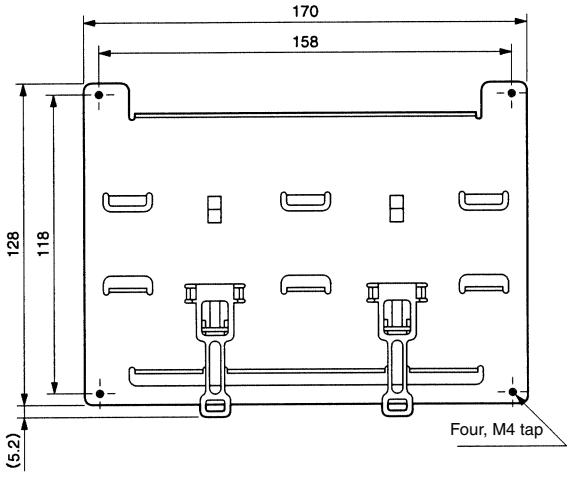

Inverter		DIN rail mounting bracket
3-phase 200 VAC	CIMR-V7AZ - 20P1/ 20P4/ 20P7	3G3IV-PEZZ08122A
	CIMR-V7AZ - 21P5/ 22P2	3G3IV-PEZZ08122B
	CIMR-V7AZ - 24P0	3G3IV-PEZZ08122C
Single-phase 200 VAC	CIMR-V7AZ - B0P1/ B0P2/ B0P4	3G3IV-PEZZ08122A
	CIMR-V7AZ - B0P7/ B1P5	3G3IV-PEZZ08122B
	CIMR-V7AZ - B2P2	3G3IV-PEZZ08122C
	CIMR-V7AZ - B4P0	3G3IV-PEZZ08122D
3-phase 400 VAC	CIMR-V7AZ - 40P2/ 40P4/ 40P7/ 41P5/ 42P2	3G3IV-PEZZ08122B
	CIMR-V7AZ - 44P0	3G3IV-PEZZ08122C

Attachments

Heatsink external mounting attachment

When mounting an external cooling-fan to the V7AZ, this attachment is required.

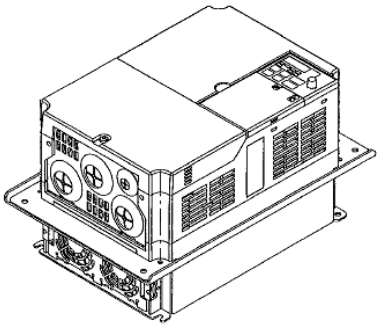

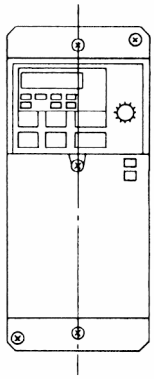

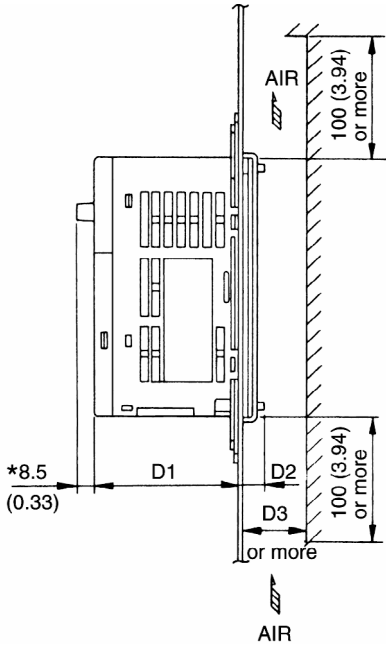

CIMR-V7AZ	Attachment order code	Dimensions in mm		
		D1	D2	D3
V7AZ-20P1 V7AZ-20P2	EZZ08136A	69.2	12	30
V7AZ-20P4	EZZ08136B	69.2	42	50
V7AZ-20P7	EZZ08136C	69.2	62	70
V7AZ-21P5	EZZ08136D	73	58	70
V7AZ-22P2		98	58	70
V7AZ-24P0	-EZZ08136F	78.6	64.4	70
V7AZ-25P5 V7AZ-27P5	EZZ08136H	113.8	56.2	60
V7AZ-B0P1 V7AZ-B0P2	EZZ08136A	69.2	12	30
V7AZ-B0P4	EZZ08136B	92.2	42	50
V7AZ-B0P7	EZZ08136D	82	58	70
V7AZ-B1P5		98	58	70
V7AZ-B2P2	EZZ08136F	98.6	64.4	70
V7AZ-B4P0	EZZ08136G	115.6	64.4	70
V7AZ-40P2	EZZ08136E	82	13.2	30
V7AZ-40P4	EZZ08136D	82	28	40
V7AZ-40P7		82	58	70
V7AZ-41P5 V7AZ-42P2		98	58	70
V7AZ-43P0 V7AZ-44P0	EZZ08136F	78.6	64.4	70
V7AZ-45P5 V7AZ-47P5	EZZ08136H	113.8	56.2	60

Braking resistor unit ERF-150WJ

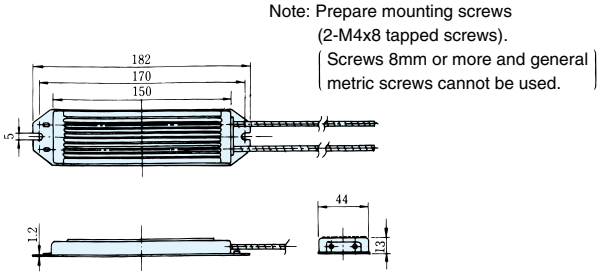

Braking resistors unit

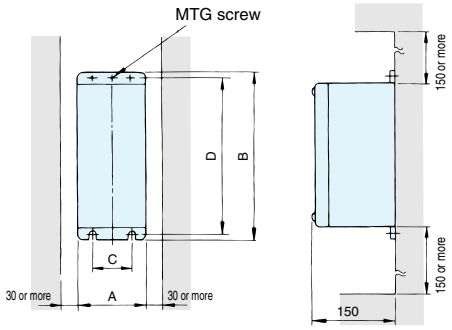

Voltage	Model LKEB-□	Dimensions in mm					Approx. weight kg
		A	B	C	D	MTG.screw	
200 V class	20P7	105	275	50	260	M5x3	3.0
	21P5	130	350	75	335	M5x4	4.5
	22P2	130	350	75	335	M5x4	4.5
	40P7	130	350	75	350	M5x4	5.0
	25P5	250	350	200	335	M6x4	7.5
	27P5	350	350	200	335	M6x4	8.5
400 V class	40P7	105	275	50	260	M5x3	3.0)
	41P5	130	350	75)	335	M5x4	4.5
	42P2	130	350	75)	335	M5x4	4.5
	43P0	130	350	75	335	M5x4	5.0
	43P7						
	45P5	250	350	200	335	M6x4	7.5
	47P5	350	350	200	335	M6x4	8.5

Installation

Standard connections

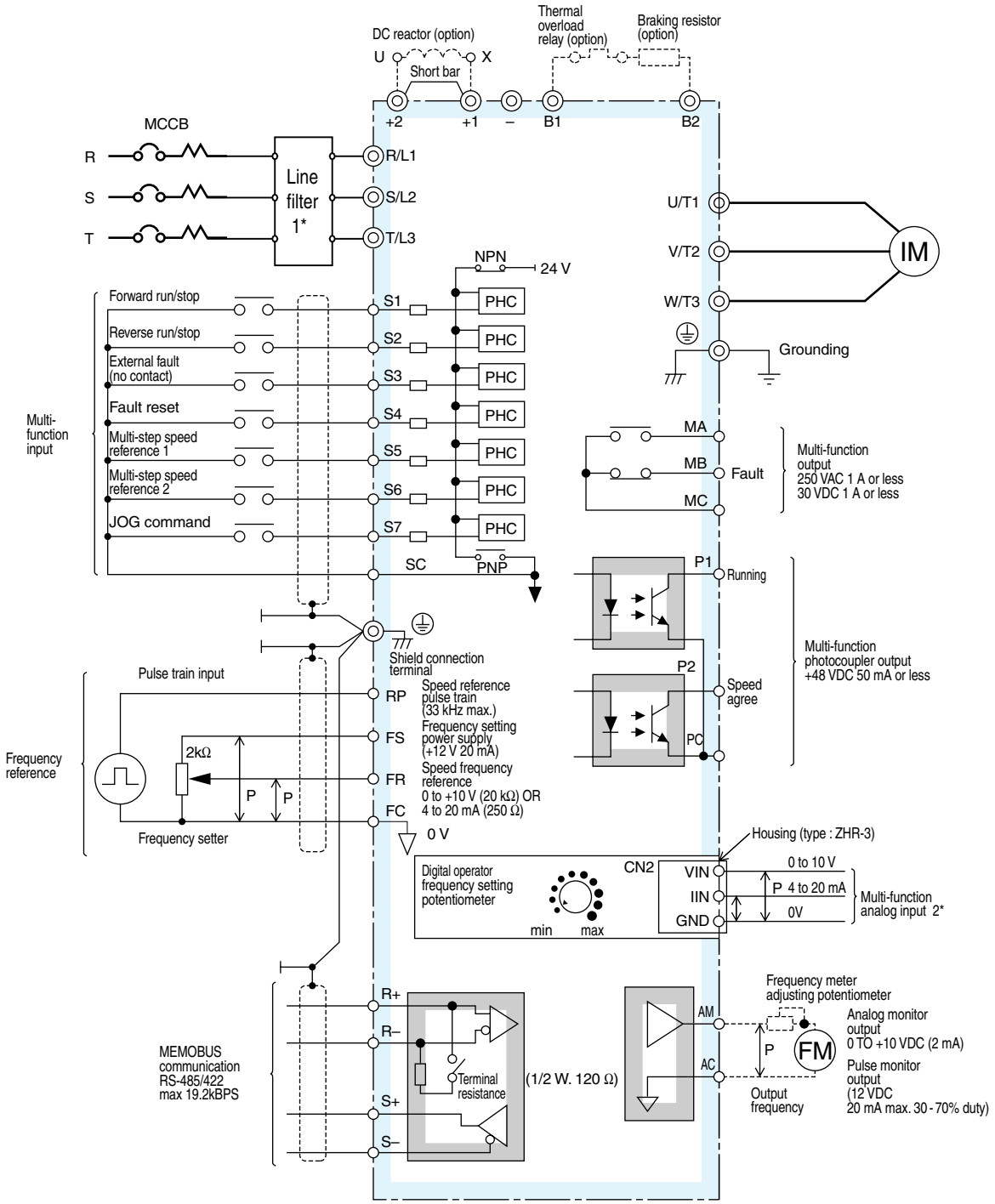

1* V7 IP65 types are built-in filter.

2* A housing is required when using the CN2 terminal on the back side of the digital operator.
1m analog input cable (code no. 3G3MV-PCN-CN2) is available for housing on request

: shielded wire P : twisted pair shielded wire

Shows the following two kinds of connections (factory setting) :
· Input signals (S1 to S7) are non-voltage contacts
· Sequence connection by NPN transistor (0V common)

A +24 V power supply is required for sequence connection by PNP transistor (+24 V common) .

Main circuit

Terminal	Name	Function (signal level)
R/L1, S/L2, T/L3	AC power supply input	Main circuit power supply input (use R/L1 and S/L2 for single-phase power supply inverter. Do not use T/L3 of the models less than 0.75 kW for other usage, such as a junction terminal.)
U/T1, V/T2, W/T3	Inverter output	For inverter output
B1, B2	Braking resistor connection	For braking resistor connection
+2, +1	DC reactor connection	Remove the short bar between +2 and +1 when connecting DC reactor (option)
+1, –	DC power supply input	For power supply input (+1: positive electrode; – : negative electrode)*
⏚	Grounding	For grounding (grounding should conform to the local grounding code.)

Control Circuit

Type	No.	Signal name	Function	Signal level
Digital input signals	S1	Multi-function input selection 1	Factory setting: runs when CLOSED, stops when OPEN.	24VDC, 8mA photocoupler insulation
	S2	Multi-function input selection 2	Factory setting: runs when CLOSED, stops when OPEN.	
	S3	Multi-function input selection 3	Factory setting: "fault reset"	
	S4	Multi-function input selection 4	Factory setting: "external fault (NO contact)"	
	S5	Multi-function input selection 5	Factory setting: "multi-step speed reference 1"	
	S6	Multi-function input selection 6	Factory setting: "multi-step speed reference 2"	
	S7	Multi-function input selection 7	Factory setting: "JOG command"	
	SC	Multi-function input selection Common	Common for control signal	
Analog input signals	RP	Speed reference pulse train input	33 kHz max.	
	FS	Power supply terminal for frequency setting	+12V (allowable current: 20 mA max.)	
	FR	Speed frequency reference	0 to +10 VDC (20 kΩ) or 4 to 20 mA (250 Ω), 0 to 20 mA (250 Ω) (resolution 1/1000)	
	FC	Frequency reference common	0 V	
	1 (CN2)	Multi-function analog voltage input	Voltage input (between terminals 1 and 3): 0 to 10 VDC (input impedance: 20 kΩ) Current input (between terminals 2 and 3): 4 to 20 mA (input impedance: 250 Ω)	
	2 (CN2)	Multi-function analog current input		
	3 (CN2	Multi-function analog input common		
Digital output signals	MA	NO contact output	Factory setting: "fault"	Contact capacity 250 VAC, 1 A or less 30 VDC, 1 A or less
	NC	Contact output		
	MC	Contact output common		
	P1	Photocoupler output 1	Factory setting: "running"	Photocoupler output: +48 VDC, 50 mA or less
	P2	Photocoupler output 2	Factory setting: "at frequency"	
	PC	Photocoupler output common	0 V	
Analog output signals	AM	Analog monitor output	Factory setting: "output frequency" 0 to +10 V output (pulse monitor output available by setting constants. Duty: 30 to 70%)	0 to 10 V 2 mA or less Resolution: 8 bits
	AC	Analog monitor common	0 V	
RS-485/422	R+	Communication input (+)	For MEMOBUS communication operation by RS-485 or RS-422 communication is available.	RS-485/422 MEMOBUS protocol 19.2 kBPS max.
	R–	Communication input (–)		
	S+	Communication output (+)		
	S–	Communication output (–)		

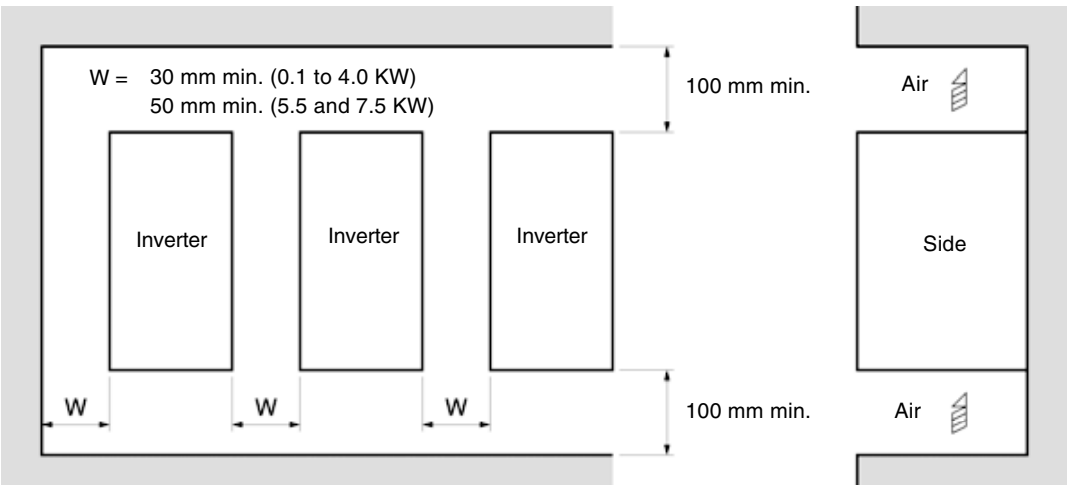

Inverter heat loss

Three-phase 200 V class

Model CIMR-V7AZ		20P1	20P2	20P4	20P7	21P5	22P2	24P0	25P5	27P5
Inverter capacity kVA		0.3	0.6	1.1	1.9	3.0	4.2	6.7	9.5	13
Rated current A		0.8	1.6	3	5	8	11	17.5	25	33
Heat loss W	Fin	3.7	7.7	15.8	28.4	53.7	60.4	96.7	170.4	219.2
	Inside unit	9.3	10.3	12.3	16.7	19.1	34.4	52.4	79.4	98.9
	Total heat loss	13.0	18.0	28.1	45.1	72.8	94.8	149.1	249.8	318.1

Single-phase 200 V class

Model CIMR-V7AZ		B0P1	B0P2	B0P4	B0P7	B1P5	B2P2	B4P0
Inverter capacity kVA		0.3	0.6	1.1	1.9	3.0	4.2	6.7
Rated current A		0.8	1.6	3	5	8	11	17.5
Heat loss W	Fin	3.7	7.7	15.8	28.4	53.7	64.5	98.2
	Inside unit	10.4	12.3	16.1	23.0	29.1	49.1	78.2
	Total heat loss	14.1	20.0	31.9	51.4	82.8	113.6	176.4

Three-phase 400 V class

Model CIMR-V7AZ		40P2	40P4	40P7	41P5	42P2	44P0	45P5	47P5
Inverter capacity kVA		1.4	2.6	3.7	4.2	5.5	7.0	11	14
Rated current A		1.8	3.4	4.8	5.5	7.2	8.6	14.8	18
Heat loss W	Fin	15.1	30.3	45.8	50.5	58.2	73.4	168.8	209.6
	Inside unit	15.0	24.6	29.9	32.5	37.6	44.5	87.7	99.3
	Total heat loss	30.1	54.9	75.7	83.0	95.8	117.9	256.5	308.9

Installation conditions for IP65

Install the inverter vertically in order to ensure proper cooling. When installing the inverter, always provide the following minimum installation space to allow normal heat dissipation.

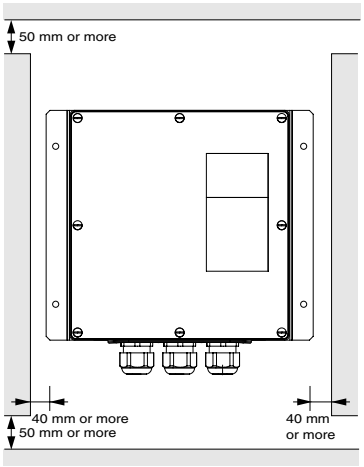

Side spaces

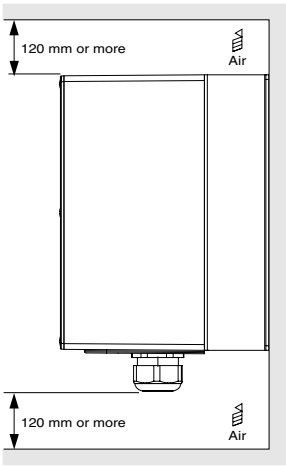

Top and bottom spaces

1. Always provide enough space for the main circuit or control lines including cable gland.
2. If installing inverters next to one another, provide a minimum spacing of 60mm.

Connections for braking resistor

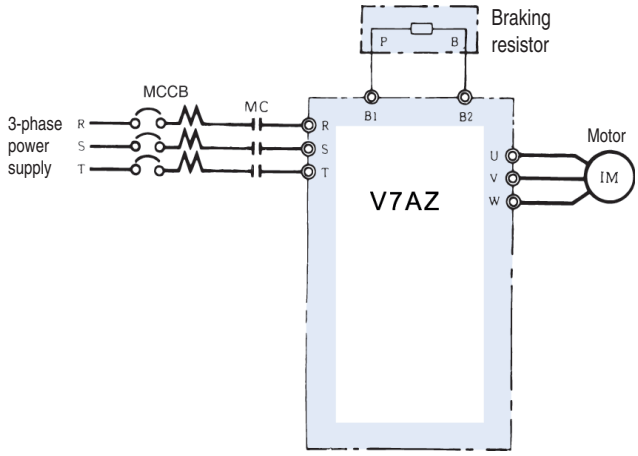

Connections for braking resistor unit

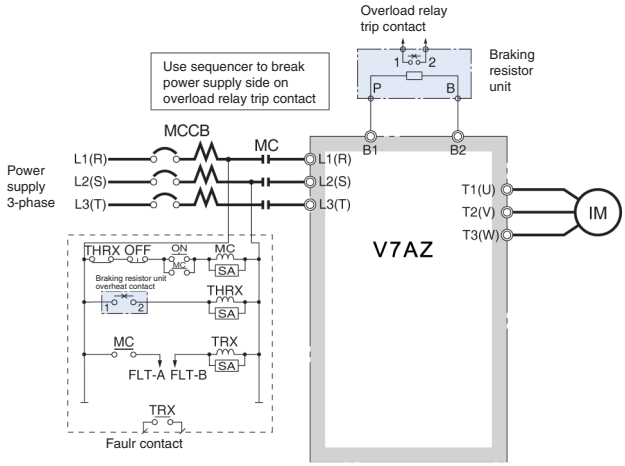

AC reactor

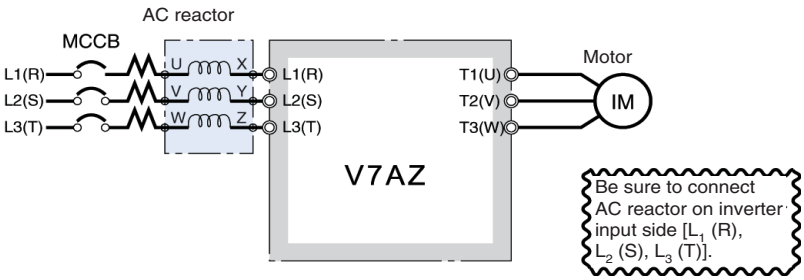

200 V class			400 V class		
Max. applicable motor output kW	Current value A	Inductance mH	Max. applicable motor output kW	Current value A	Inductance mH
0.12	2.0	2.0	------		
0.25	2.0	2.0	0.2	1.3	18.0
0.55	2.5	4.2	0.4		
1.1	5	2.1	0.75	2.5	8.4
1.5	10	1.1	1.5	5	4.2
2.2	15	0.71	2.2	7.5	3.6
4.0	20	0.53	4.0	10	2.2
5.5	30	0.35	5.5	15	1.42
7.5	40	0.265	7.5	20	1.06

DC reactor

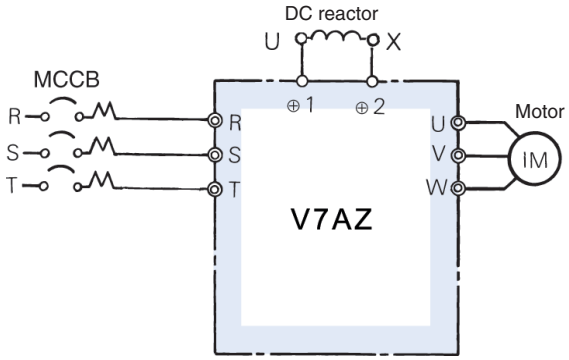

200 V class			400 V class		
Max. applicable motor output kW	Current value A	Inductance mH	Max. applicable motor output kW	Current value A	Inductance mH
0.12	5.4	8	--------		
0.25			0.2	3.2	28
0.55			0.4		
1.1			0.75		
1.5	18	3	1.5	5.7	11
2.2			2.2		
4.0			4.0	12	6.3
5.5	36	1	5.5	23	3.6
7.5			7.5		

Ordering information

3G3IV-PCN329-E
Inverter to PC cable

④

CX-Drive

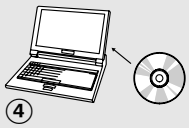

④

3G3IV-PEZZ8122_
DIN attachment

④

JVOP-144
Remote digital oper.
with potentiometer

④

JVOP-146
Remote digital oper.
with potentiometer

④

3G3IV-PCN126/326
Digital operator
extension cable

④

Line filter

*See note

①

Varispeed V7

Braking accessories

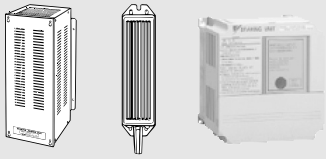

LKEB_ CDBR_B ERF150WJ_

⑤

* V7 IP65 types are built-in filter inverters.

Communication unit

*See note

②

PLC option unit

*See note

③

* Option frames are needed for V7 IP65 type.

Varispeed V7

200 V

Specifications			Model
1x200 V	0.12 Kw	0.8 A	CIMR-V7AZB0P10
	0.25 Kw	1.6 A	CIMR-V7AZB0P20
	0.55 Kw	3.0 A	CIMR-V7AZB0P40
	1.1 Kw	5.0 A	CIMR-V7AZB0P70
	1.5 Kw	8.0 A	CIMR-V7AZB1P50
	2.2 Kw	11.0 A	CIMR-V7AZB2P20
	4.0 Kw	17.5 A	CIMR-V7AZB4P00
3x200 V	0.12 Kw	0.8 A	CIMR-V7AZ20P10
	0.25 Kw	1.6 A	CIMR-V7AZ20P20
	0.55 Kw	3.0 A	CIMR-V7AZ20P40
	1.1 Kw	5.0 A	CIMR-V7AZ20P70
	1.5 Kw	8.0 A	CIMR-V7AZ21P50
	2.2 Kw	11.0 A	CIMR-V7AZ22P20
	4.0 Kw	17.5 A	CIMR-V7AZ24P00
	5.5 Kw	25.0 A	CIMR-V7AZ25P51
	7.5 Kw	33.0 A	CIMR-V7AZ27P51

400 V

Specifications			Model
3x400 V	0.37 Kw	1.2 A	CIMR-V7AZ40P20
	0.55 Kw	1.8 A	CIMR-V7AZ40P40
	1.1 Kw	3.4 A	CIMR-V7AZ40P70
	1.5 Kw	4.8 A	CIMR-V7AZ41P50
	2.2 Kw	5.5 A	CIMR-V7AZ42P20
	3.0 Kw	7.2 A	CIMR-V7AZ43P00
	4.0 Kw	9.2 A	CIMR-V7AZ44P00
	5.5 Kw	14.8 A	CIMR-V7AZ45P51
	7.5 Kw	18.0 A	CIMR-V7AZ47P51

Varispeed V7 IP65

200 V

Specifications			Model
1x200 V	0.55 Kw	3.0 A	CIMR-V7TZB0P405
	1.1 Kw	5.0 A	CIMR-V7TZB0P705
	1.5 Kw	8.0 A	CIMR-V7TZB1P505
	2.2 Kw	11.0 A	CIMR-V7TZB2P205

400 V

Specifications			Model
3x400 V	0.55 Kw	1.8 A	CIMR-V7TZ40P405
	1.1 Kw	3.4 A	CIMR-V7TZ40P705
	1.5 Kw	4.8 A	CIMR-V7TZ41P505
	2.2 Kw	5.5 A	CIMR-V7TZ42P205
	3.0 Kw	7.2 A	CIMR-V7TZ43P005
	4.0 Kw	9.2 A	CIMR-V7TZ44P005

①Line filters *

Inverter		Line filter			
Voltage	Model CIMR-V7AZ	Schaffner	Rasmi	Rated current (A)	Weight (kg)
3-Phase 200 VAC	20P1 / 20P2 / 20P4 / 20P7	3G3MV-PFI2010-SE	3G3MV-PFI2010-E	10	0.8
	21P5 / 22P2	3G3MV-PFI2020-SE	3G3MV-PFI2020-E	20	1.0
	24P0	3G3MV-PFI2030-SE	3G3MV-PFI2030-E	30	1.1
	25P5 / 27P5	-	3G3MV-PFI2050-E	50	2.3
Single-Phase 200 VAC	B0P1 / B0P2 / B0P4	3G3MV-PFI1010-SE	3G3MV-PFI1010-E	10	0.6
	B0P7 / B1P5	3G3MV-PFI1020-SE	3G3MV-PFI1020-E	20	1.0
	B2P2	3G3MV-PFI1030-SE	3G3MV-PFI1030-E	30	1.1
	B4P0	3G3MV-PFI1040-SE	3G3MV-PFI1040-E	40	1.2
3-Phase 400 VAC	40P2 / 40P4	3G3MV-PFI3005-SE	3G3MV-PFI3005-E	5	1.0
	40P7 / 41P5 / 42P2	3G3MV-PFI3010-SE	3G3MV-PFI3010-E	10	1.0
	43P0 / 44P0	3G3MV-PFI3020-SE	3G3MV-PFI3020-E	15	1.1
	45P5 / 47P5	3G3MV-PFI3030-SE	3G3MV-PFI3030-E	30	2.3

* V7 IP65 types are built-in filter inverters.

② Communication cards

Type	Model [1]	Description	Function
Communication option board	3G3MV-PDRT2	DeviceNet option card [2]	• Used for running or stopping the inverter, setting or referencing parameters, and monitoring output frequency, output current, or similar items through DeviceNet communication with the host controller.
	SI-P1/V7	PROFIBUS-DP option card	• Used for running or stopping the inverter, setting or referencing parameters, and monitoring output frequency, output current, or similar items through PROFIBUS-DP communication with the host controller.
	SI-S1/V7	Can open option card	• Used for running or stopping the inverter, setting or referencing parameters, and monitoring output frequency, output current, or similar items through CANopen communication with the host controller.
	3G3MV-PCORT21	Can open gateway	• Used for running or stopping the inverter, setting or referencing parameters, and monitoring output frequency, output current, or similar items through CANopen communication with the host controller.
	SI-T1/V7	MECHATROLINK-II option card	• Used for running or stopping the inverter, setting or referencing parameters, and monitoring output frequency, output current, or similar items through MECHATROLINK-II communication with the host controller. • High speed motion bus. • Host controller: TrajeXia, MCH or MP series.[3]

1. Option frame accessory is needed for V7 IP65 types when communications option units are used.
2. For V7 IP65 types with DeviceNet communication, SI-N1/V7 should be used.
3. Please refer to TrajeXia, MCH or MP series section for host controller technical information.

③ PLC option card

Type	Model [1]	Description	Function
PLC option	3G3MV-P10CDT-E 3G3MV-P10CDT3-E	PLC option	• Full PLC featrues, wireless installation and seamless access to the inverter parameters and analogue/digital inputs and outputs. • Standard OMRON tools can be used for programming • Calendar / clock
		PLC option with RS 422/485	• Same features as standard models with RS 422/485 support.

1. Option frame accessory is needed on V7 IP65 types when PLC option unit is used.

④ Option frame accessory for V7 IP65

Type	Model	Description	Function
Option frame	V7TZ-FR1 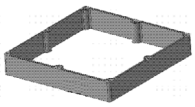	Option frame	• Frame accessory is needed when communication option unit or PLC option unit are used with Varispeed V7 IP65.

⑤ Accessories

Types	Model	Description	Functions
Digital operator	JVOP-146	Remote digital operator without potentiometer	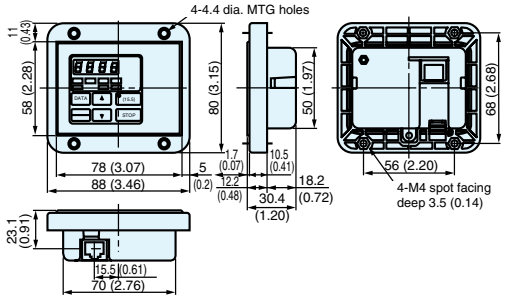
	JVOP-144	Remote digital operator with potentiometer	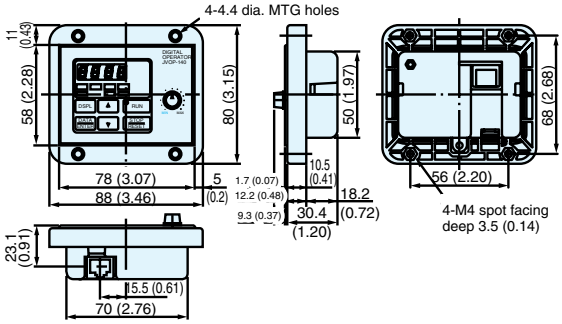
	72606-CVS31060	Blank cover	-----
	3G3IV-PEZZ0838BA	Digital operator case	same as JVOP-144 without operator
Accessories	3G3IV-PCN126 3G3IV-PCN326	Digital operator extension cable 1 meter 3 meters	-----
	3G3IV-PCN329-E	PC configuration cable	-----

⑤ Computer software

Types	Model	Description	Installation
Software	CX-drive	Computer software	Configuration and monitoring software tool
	CX-One	Computer software	Configuration and monitoring software tool

⑥ Braking unit, braking resistor unit

Inverter				Braking resistor unit								
Voltage	Max. applicable motor output kW	Inverter model CIMR-V7AZ		Inverter-mounted type (3 %ED, 10 sec max)				Separately-installed type (10 %ED, 10 sec. max.)				
		Three-phase	Single-phase	Model ERF-150WJ_	Resistance Ω	No. of used	Braking torque %	Model LKEB-□	Resistor spec. (per one unit) W Ω	No. of used	Braking torque %	Connectable min. resistance Ω
200 V (single-/ three-phase)	0.12	20P1	B0P1	401	400	1	220	–	–	–	–	300
	0.25	20P2	B0P2	401	400	1	220	–	–	–	–	300
	0.55	20P4	B0P4	201	200	1	220	20P7	70 200	1	220	200
	1.1	20P7	B0P7	201	200	1	125	20P7	70 200	1	125	120
	1.5	21P5	B1P5	101	100	1	125	21P5	260 100	1	125	60
	2.2	22P2	B2P2	700	70	1	120	22P2	260 70	1	120	60
	4.0	24P0	B4P0	620	62	1	100	23P7	390 40	1	125	32
	5.5	25P5	–	–	–	–	–	25P5	520 30	1	115	9.6
	7.5	27P5	–	–	–	–	–	27P5	780 20	1	125	9.6
400 V (three-phase)	0.37	40P2	–	751	750	1	230	–	–	–	–	750
	0.55	40P4	–	751	750	1	230	40P7	70 750	1	230	750
	1.1	40P7	–	751	750	1	130	40P7	70 750	1	130	510
	1.5	41P5	–	401	400	1	125	41P5	260 400	1	125	240
	2.2	42P2	–	301	300	1	115	42P2	260 250	1	135	200
	3.0	43P0	–	401	400	2	105	43P7	390 150	1	135	100
	4.0	44P0	–									
	5.5	45P5	–	–	–	–	–	45P5	520 100	1	135	32
	7.5	47P5	–	–	–	–	–	47P5	780 75	1	130	32

1181 Budapest, Kondor Béla sétány 1.
Tel/Fax: 1 291 3444
Tel/Fax: 1 296 0296
budapest@iasautomatika.hu

IAS Automatika Kft.
www.iasautomatika.hu

4024 Debrecen, Sumen u. 26-28.
Tel/Fax: 52 368 300
Fax: 52 368 528
debrecen@iasautomatika.hu