RobustLine-SuperCap rotary actuator with emergency control function and extended functionalities for adjusting dampers in technical building installations and laboratories

- **Air damper size up to approx. 1.2 m²**
- **Nominal torque 6 Nm**
- **Nominal voltage AC/DC 24 V**
- **Control Open-close**
- **Running time motor 4 s**
- **Design life SuperCaps: 15 years**
- **Optimum protection against corrosion and chemical influences, UV radiation, damp and condensation**

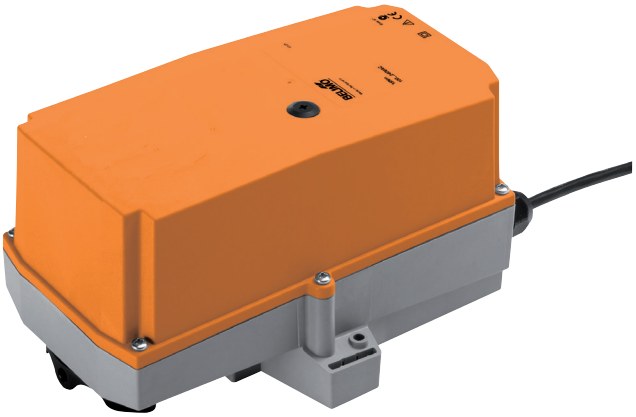

Technical data

Electrical data	Nominal voltage	AC/DC 24 V
	Nominal voltage frequency	50/60 Hz
	Nominal voltage range	AC 19.2...28.8 V / DC 21.6...28.8 V
	Power consumption in operation	11 W
	Power consumption in rest position	3 W
	Power consumption for wire sizing	22 VA
	Connection supply / control	Cable 1 m, 3 x 0.75 mm² (halogen-free)
	Parallel operation	Yes (note the performance data)
Functional data	Torque motor	Min. 6 Nm
	Setting emergency setting position (POP)	0...100%, adjustable in increments of 10% (POP rotary knob on 0 corresponds to left end stop)
	Position accuracy	±5%
	Direction of motion motor	Selectable with switch 0 (ccw rotation) / 1 (cw rotation)
	Direction of motion emergency control function	Selectable with switch 0...100%
	Manual override	Gear disengagement with push-button, can be locked
	Angle of rotation	Max. 95°
	Angle of rotation note	can be limited on both sides with adjustable mechanical end stops
	Minimum angle of rotation	Min. 30°
	Running time motor	4 s / 90°
	Running time emergency control position	4 s / 90°
	Running time emergency setting position note	<4 s @ 0...50°C
	Adaption setting range	manual (automatic on first power-up)
	Sound power level motor	60 dB(A)
	Sound power level emergency control position	60 dB(A)
	Spindle driver	Universal spindle clamp 8...20 mm
	Position indication	Mechanically, pluggable
Safety	Protection class IEC/EN	III Safety extra-low voltage
	Degree of protection IEC/EN	IP66 + IP67
	EMC	CE according to 2004/108/EC
	Certification IEC/EN	IEC/EN 60730-1 and IEC/EN 60730-2-14
	Mode of operation	Type 1.AA
	Rated impulse voltage supply / control	0.8 kV
	Control pollution degree	4
	Ambient temperature	-30...50°C
	Non-operating temperature	-40...80°C
	Ambient humidity	100% r.h.
	Maintenance	Maintenance-free
Weight	Weight approx.	2.3 kg
Terms	Abbreviations	POP = Power off position / emergency setting position PF = Power fail delay time / bridging time

Safety notes

- The device must not be used outside the specified field of application, especially not in aircraft or in any other airborne means of transport.
- Only authorised specialists may carry out installation. All applicable legal or institutional installation regulations must be complied during installation.
- Junction boxes must at least correspond with enclosure IP degree of protection!
- The cover of the protective housing may be opened for adjustment and servicing. When it is closed afterwards, the housing must seal tight (see installation instructions).
- The device may only be opened in the manufacturer's factory. It does not contain any parts that can be replaced or repaired by the user.
- The cables must not be removed from the device installed in the interior.
- To calculate the torque required, the specifications supplied by the damper manufacturers concerning the cross-section, the design, the installation site and the ventilation conditions must be observed.
- The device contains electrical and electronic components and must not be disposed of as household refuse. All locally valid regulations and requirements must be observed.
- The information on chemical resistance refers to laboratory tests with raw materials and finished products and to trials in the field in the areas of application indicated.
- The materials used may be subjected to external influences (temperature, pressure, constructional fixture, effect of chemical substances, etc.), which cannot be simulated in laboratory tests or field trials.
- The information regarding areas of application and resistance can therefore only serve as a guideline. In case of doubt, we definitely recommend that you carry out a test. This information does not imply any legal entitlement. Belimo will not be held liable and will provide no warranty. The chemical or mechanical resistance of the materials used is not alone sufficient for judging the suitability of a product. Regulations pertaining to combustible liquids such as solvents etc. must be taken into account with special reference to explosion protection.

Product features

Fields of application

The actuator is particularly suitable for utilisation in outdoor applications and is protected against the following weather conditions:
- Wood drying
- Animal breeding
- Food processing
- Agricultural
- Swimming baths / bathrooms
- Rooftop ventilation plant rooms
- General outdoor applications
- Changing atmosphere
- Laboratories

Resistances

Noxious gas test EN 60068-2-60 (Fraunhofer Institut ICT / DE)
Salt fog spray test EN 60068-2-52 (Fraunhofer Institut ICT / DE)
Ammoniac test DIN 50916-2 (Fraunhofer Institut ICT / DE)
Climate test IEC60068-2-30 (Trikon Solutions AG / CH)
Disinfectant (animals) (Trikon Solutions AG / CH)
UV Test (Solar radiation at ground level) EN 60068-2-5, EN 60068-2-63 (Quinel / Zug CH)

Used materials

Actuator housing polypropylene (PP)
Cable glands / hollow shaft polyamide (PA)
Connecting cable FRNC
Clamp / screws in general Steel 1.4404
Seals EPDM
Form fit insert aluminium anodised

Mode of operation

The actuator moves the damper to the desired operating position at the same time as the integrated capacitors are charged. Interrupting the supply voltage causes the damper to be rotated back into the emergency setting position (POP) by means of stored electrical energy.

Product features

Pre-charging time (start up)

The capacitor actuators require a pre-charging time. This time is used for charging the capacitors up to a usable voltage level. This ensures that, in the event of an electricity interruption, the actuator can move at any time from its current position into the preset emergency setting position (POP). The duration of the pre-charging time depends mainly on how long the power was interrupted.

Typical pre-charging times

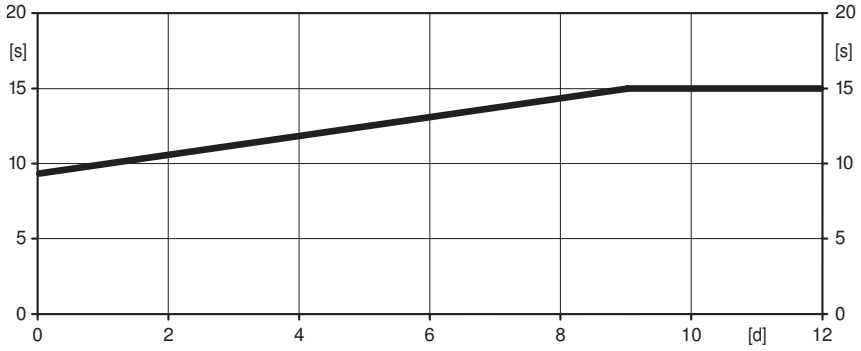

[d] = Electricity interruption in days
[s] = Pre-charging time in seconds
PF[s] = Bridging time

	[d]				
	0	**1**	**2**	**7**	**≥10**
[s]	9	10	11	13	15

Delivery condition (capacitors)

The actuator is completely discharged after delivery from the factory, which is why the actuator requires approximately 20 s pre-charging time before initial commissioning in order to bring the capacitors up to the required voltage level.

Simple direct mounting

Simple direct mounting on the damper spindle with an universal spindle clamp, supplied with an anti-rotation device to prevent the actuator from rotating.

Manual override

Manual control with push-button possible - temporary. The gear is disengaged and the actuator decoupled for as long as the button is pressed.

High functional reliability

The actuator is overload protected, requires no limit switches and automatically stops when the end stop is reached.

Adjustable angle of rotation

Adjustable angle of rotation with mechanical end stops. A minimum permissible angle of rotation of 30° must be allowed for.

Home position

The first time the supply voltage is switched on, i.e. at the time of commissioning, the actuator carries out an adaption, which is when the operating range and position feedback adjust themselves to the mechanical setting range.
The detection of the mechanical end stops enables a gentle approach to the end positions, thus protecting the actuator mechanics.
The actuator then moves into the position defined by the positioning signal.

Direction of rotation switch

When actuated, the direction of rotation switch changes the running direction in normal operation. The direction of rotation switch has no influence on the emergency setting position (POP) which has been set.

Adaption and synchronisation

An adaption can be triggered manually by pressing the “Adaption” button. Both mechanical end stops are detected during the adaption (entire setting range).
Automatic synchronisation after pressing the gear disengagement button is configured. The synchronisation is in the home position (0%).
The actuator then moves into the position defined by the positioning signal.

Emergency setting position (POP) rotary knob

The «Emergency setting position» rotary knob can be used to adjust the desired emergency setting position (POP) between 0 and 100% in 10% increments. The rotary knob allways refers to the adapted angle of rotation range. In the event of an electricity interruption, the actuator will move into the selected emergency setting position (POP).

Electrical installation

Notes

- Connection via safety isolating transformer.
- Parallel connection of other actuators possible. Observe the performance data.

Wiring diagrams

AC/DC 24 V, open-close

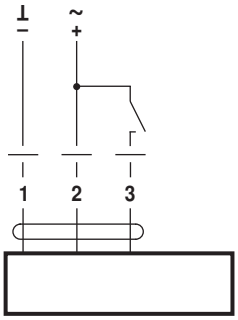

Cable colours:
1 = black
2 = red
3 = white

Operating controls and indicators

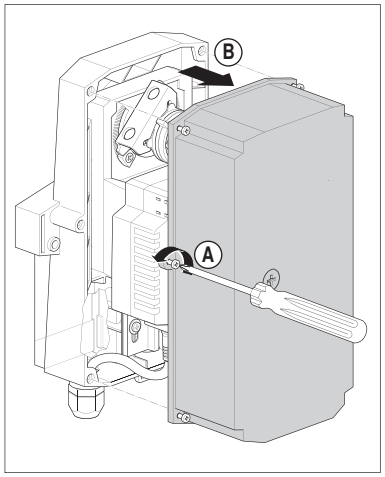

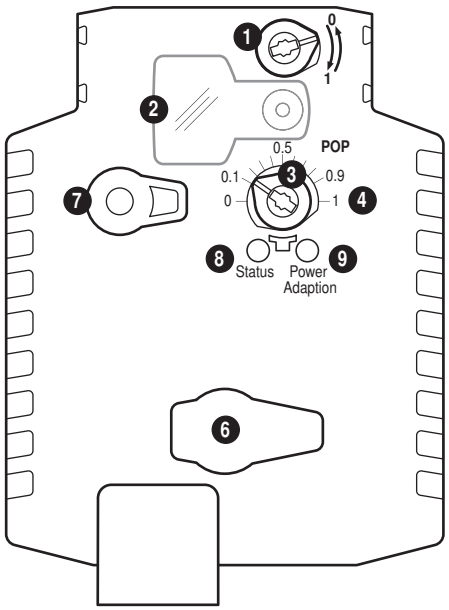

1. **Direction of rotation switch**
2. **Cover, POP button**
3. **POP button**
4. **Scale for manual adjustment**
6. (no function)
7. **Disengagement button**

LED displays 8 yellow	9 green	Meaning / function
Off	On	Operation OK / without fault
Off	Flashing	POP function active
On	Off	Fault
Off	Off	Not in operation
On	On	Adaptation procedure running

9. **Press button:** Triggers angle of rotation adaption, followed by standard operation

Operating controls and indicators

Setting emergency setting position (POP)

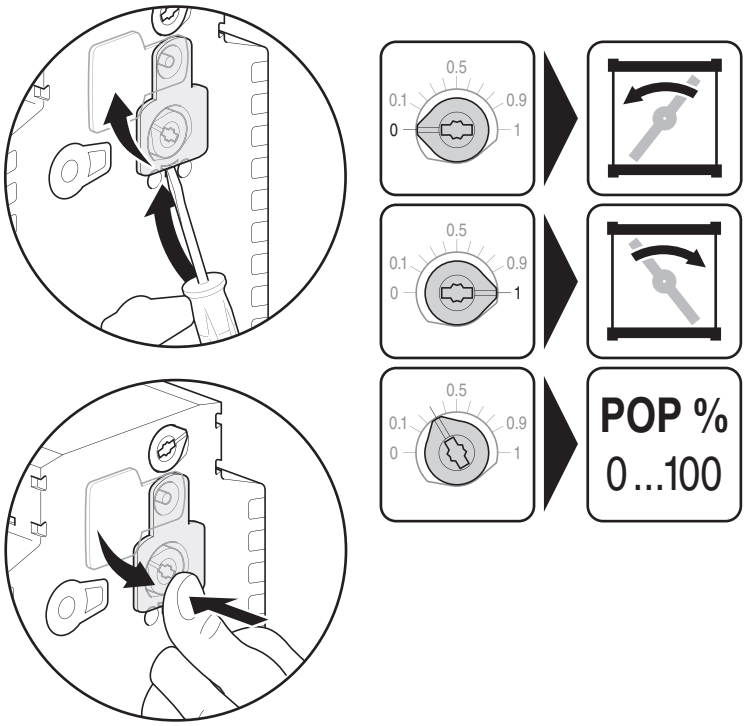

Dimensions [mm]

Spindle length

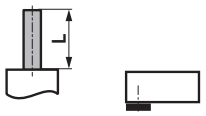	-
	20...58

Clamping range

8...20	8...14	10...20

Dimensional drawings

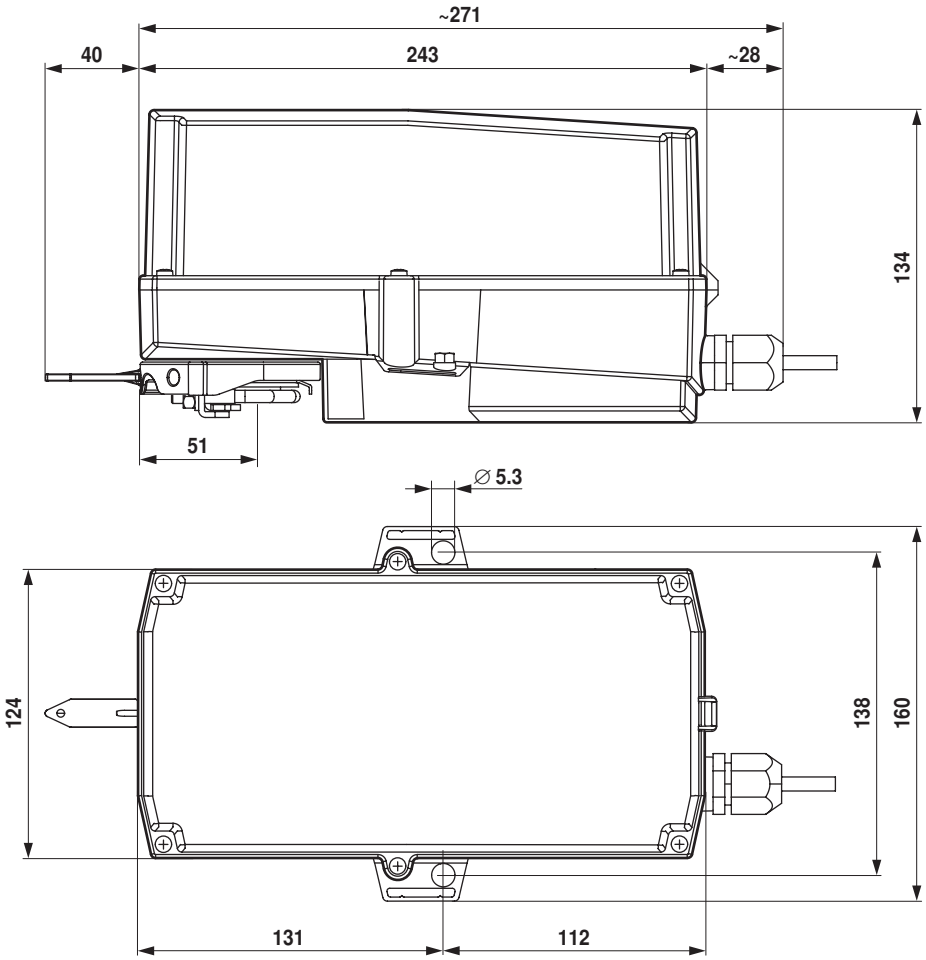

Modulating RobustLine-SuperCap rotary actuator with emergency control function and extended functionalities for adjusting dampers in technical building installations and laboratories.

- **Air damper size up to approx. 1.2 m²**
- **Nominal torque 6 Nm**
- **Nominal voltage AC/DC 24 V**
- **Control Modulating DC (0)2...10 V**
- **Position feedback DC 2...10 V**
- **Running time motor 4 s**
- **Design life SuperCaps: 15 years**
- **Optimum protection against corrosion and chemical influences, UV radiation, damp and condensation**

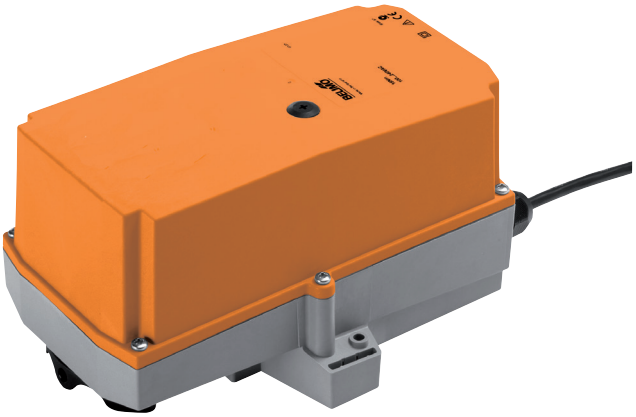

Technical data

Electrical data	Nominal voltage	AC/DC 24 V
	Nominal voltage frequency	50/60 Hz
	Nominal voltage range	AC 19.2...28.8 V / DC 21.6...28.8 V
	Power consumption in operation	11 W
	Power consumption in rest position	3 W
	Power consumption for wire sizing	22 VA
	Connection supply / control	Cable 1 m, 4 x 0.75 mm² (halogen-free)
	Parallel operation	Yes (note the performance data)
Functional data	Torque motor	Min. 6 Nm
	Positioning signal Y	DC 0...10 V
	Positioning signal Y note	Input impedance 100 kΩ
	Operating range Y	DC 2...10 V
	Position feedback U	DC 2...10 V
	Position feedback U note	Max. 0.5 mA
	Setting emergency setting position (POP)	0...100%, adjustable in increments of 10% (POP rotary knob on 0 corresponds to left end stop)
	Position accuracy	±5%
	Direction of motion motor	Selectable with switch 0 / 1
	Direction of motion note	Y = 0 V: At switch position 0 (ccw rotation) / 1 (cw rotation)
	Direction of motion emergency control function	Selectable with switch 0...100%
	Manual override	Gear disengagement with push-button, can be locked
	Angle of rotation	Max. 95°
	Angle of rotation note	can be limited on both sides with adjustable mechanical end stops
	Minimum angle of rotation	Min. 30°
	Running time motor	4 s / 90°
	Running time emergency control position	4 s / 90°
	Running time emergency setting position note	<4 s @ 0...50°C
	Adaption setting range	manual (automatic on first power-up)
	Sound power level motor	60 dB(A)
	Sound power level emergency control position	60 dB(A)
	Spindle driver	Universal spindle clamp 8...20 mm
	Position indication	Mechanically, pluggable
Safety	Protection class IEC/EN	III Safety extra-low voltage
	Protection class UL	UL Class 2 Supply
	Degree of protection IEC/EN	IP66 + IP67
	Degree of protection NEMA/UL	NEMA 2, UL Enclosure Type 2
	EMC	CE according to 2004/108/EC
	Certification IEC/EN	IEC/EN 60730-1 and IEC/EN 60730-2-14
	Certification UL	cULus according to UL 60730-1A, UL 60730-2-14 and CAN/CSA E60730-1:02
	Mode of operation	Type 1.AA

Technical data

Safety	Rated impulse voltage supply / control	0.8 kV
	Control pollution degree	4
	Ambient temperature	-30...50°C
	Non-operating temperature	-40...80°C
	Ambient humidity	100% r.h.
	Maintenance	Maintenance-free
Weight	Weight approx.	2.3 kg
Terms	Abbreviations	POP = Power off position / emergency setting position PF = Power fail delay time / bridging time

Safety notes

- The device must not be used outside the specified field of application, especially not in aircraft or in any other airborne means of transport.
- Only authorised specialists may carry out installation. All applicable legal or institutional installation regulations must be complied during installation.
- Junction boxes must at least correspond with enclosure IP degree of protection!
- The cover of the protective housing may be opened for adjustment and servicing. When it is closed afterwards, the housing must seal tight (see installation instructions).
- The device may only be opened in the manufacturer's factory. It does not contain any parts that can be replaced or repaired by the user.
- The cables must not be removed from the device installed in the interior.
- To calculate the torque required, the specifications supplied by the damper manufacturers concerning the cross-section, the design, the installation site and the ventilation conditions must be observed.
- The device contains electrical and electronic components and must not be disposed of as household refuse. All locally valid regulations and requirements must be observed.
- The information on chemical resistance refers to laboratory tests with raw materials and finished products and to trials in the field in the areas of application indicated.
- The materials used may be subjected to external influences (temperature, pressure, constructional fixture, effect of chemical substances, etc.), which cannot be simulated in laboratory tests or field trials.
- The information regarding areas of application and resistance can therefore only serve as a guideline. In case of doubt, we definitely recommend that you carry out a test. This information does not imply any legal entitlement. Belimo will not be held liable and will provide no warranty. The chemical or mechanical resistance of the materials used is not alone sufficient for judging the suitability of a product. Regulations pertaining to combustible liquids such as solvents etc. must be taken into account with special reference to explosion protection.

Product features

Fields of application

The actuator is particularly suitable for utilisation in outdoor applications and is protected against the following weather conditions:
- Wood drying
- Animal breeding
- Food processing
- Agricultural
- Swimming baths / bathrooms
- Rooftop ventilation plant rooms
- General outdoor applications
- Changing atmosphere
- Laboratories

Product features

Resistances

Noxious gas test EN 60068-2-60 (Fraunhofer Institut ICT / DE)
Salt fog spray test EN 60068-2-52 (Fraunhofer Institut ICT / DE)
Ammoniac test DIN 50916-2 (Fraunhofer Institut ICT / DE)
Climate test IEC60068-2-30 (Trikon Solutions AG / CH)
Disinfectant (animals) (Trikon Solutions AG / CH)
UV Test (Solar radiation at ground level) EN 60068-2-5, EN 60068-2-63 (Quinel / Zug CH)

Used materials

Actuator housing polypropylene (PP)
Cable glands / hollow shaft polyamide (PA)
Connecting cable FRNC
Clamp / screws in general Steel 1.4404
Seals EPDM
Form fit insert aluminium anodised

Mode of operation

The actuator moves the damper to the desired operating position at the same time as the integrated capacitors are charged. Interrupting the supply voltage causes the damper to be rotated back into the emergency setting position (POP) by means of stored electrical energy.
The actuator is connected with a standard modulating signal of DC 0...10V and drives to the position defined by the positioning signal. Measuring voltage U serves for the electrical display of the damper position 0...100% and as slave control signal for other actuators.

Pre-charging time (start up)

The capacitor actuators require a pre-charging time. This time is used for charging the capacitors up to a usable voltage level. This ensures that, in the event of an electricity interruption, the actuator can move at any time from its current position into the preset emergency setting position (POP). The duration of the pre-charging time depends mainly on how long the power was interrupted.

Typical pre-charging times

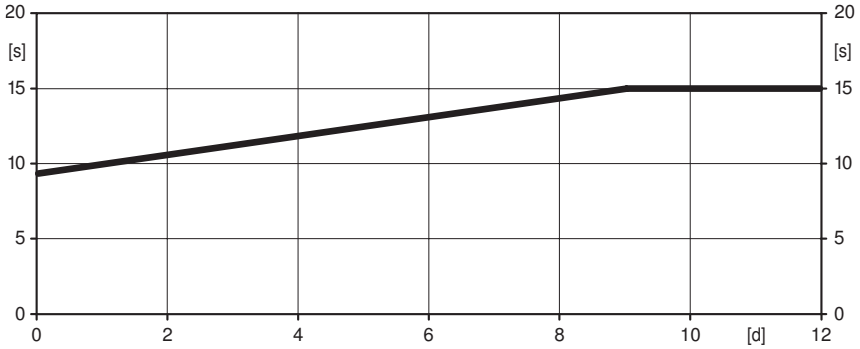

	[d]				
	0	1	2	7	≥10
[s]	9	10	11	13	15

[d] = Electricity interruption in days
[s] = Pre-charging time in seconds
PF[s] = Bridging time

Delivery condition (capacitors)

The actuator is completely discharged after delivery from the factory, which is why the actuator requires approximately 20 s pre-charging time before initial commissioning in order to bring the capacitors up to the required voltage level.

Simple direct mounting

Simple direct mounting on the damper spindle with an universal spindle clamp, supplied with an anti-rotation device to prevent the actuator from rotating.

Manual override

Manual control with push-button possible - temporary. The gear is disengaged and the actuator decoupled for as long as the button is pressed.

High functional reliability

The actuator is overload protected, requires no limit switches and automatically stops when the end stop is reached.

Adjustable angle of rotation

Adjustable angle of rotation with mechanical end stops. A minimum permissible angle of rotation of 30° must be allowed for.

Home position

The first time the supply voltage is switched on, i.e. at the time of commissioning, the actuator carries out an adaption, which is when the operating range and position feedback adjust themselves to the mechanical setting range.
The detection of the mechanical end stops enables a gentle approach to the end positions, thus protecting the actuator mechanics.
The actuator then moves into the position defined by the positioning signal.

Product features

Direction of rotation switch

When actuated, the direction of rotation switch changes the running direction in normal operation. The direction of rotation switch has no influence on the emergency setting position (POP) which has been set.

Adaption and synchronisation

An adaption can be triggered manually by pressing the “Adaption” button. Both mechanical end stops are detected during the adaption (entire setting range). Automatic synchronisation after pressing the gear disengagement button is configured. The synchronisation is in the home position (0%).
The actuator then moves into the position defined by the positioning signal.

Emergency setting position (POP) rotary knob

The «Emergency setting position» rotary knob can be used to adjust the desired emergency setting position (POP) between 0 and 100% in 10% increments. The rotary knob allways refers to the adapted angle of rotation range. In the event of an electricity interruption, the actuator will move into the selected emergency setting position (POP).

Accessories

Electrical accessories

Description	Type
Signal converter voltage/current, supply AC/DC 24V	Z-UIC
Digital position indicator for front-panel mounting, 0...99%, front mass 72 x 72 mm	ZAD24
Range controller for wall mounting, adjustable electron. Min./max. angle of rotation limitation	SBG24
Positioner for wall mounting, range 0...100%	SGA24
Positioner in a conduit box, range 0...100%	SGE24
Positioner for front-panel mounting, range 0...100%	SGF24
Positioner for wall mounting, range 0...100%	CRP24-B1

Electrical installation

Notes

- Connection via safety isolating transformer.
- Parallel connection of other actuators possible. Observe the performance data.

Wiring diagrams

AC/DC 24 V, modulating

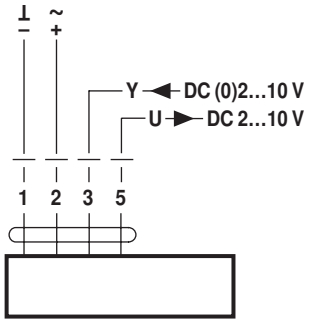

Cable colours:
1 = black
2 = red
3 = white
5 = orange

Parallel operation

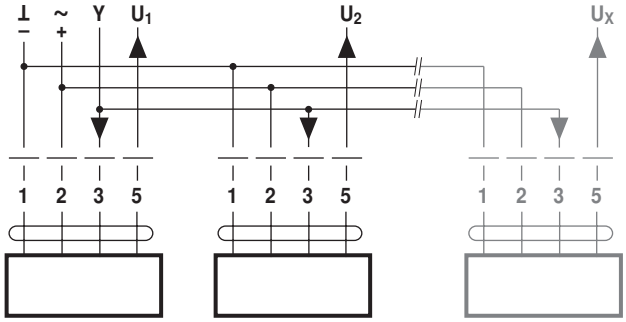

Notes
- A maximum of eight actuators can be connected in parallel.
- Parallel operation is permitted only on non-connected axes.
- Do not fail to observe performance data with parallel operation.

Operating controls and indicators

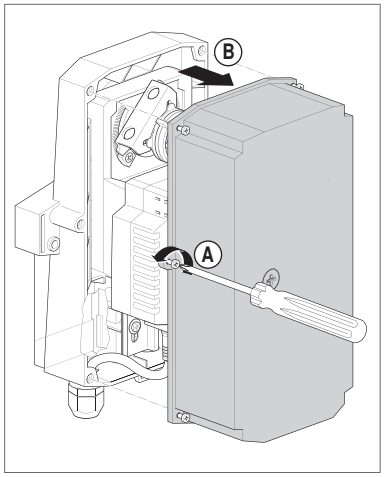

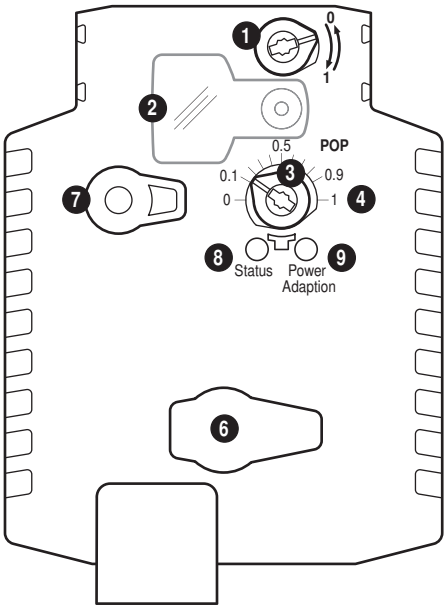

1. **Direction of rotation switch**
2. **Cover, POP button**
3. **POP button**
4. **Scale for manual adjustment**
6. (no function)
7. **Disengagement button**

LED displays 8 yellow	9 green	Meaning / function
Off	On	Operation OK / without fault
Off	Flashing	POP function active
On	Off	Fault
Off	Off	Not in operation
On	On	Adaptation procedure running

9. **Press button:** Triggers angle of rotation adaption, followed by standard operation

Setting emergency setting position (POP)

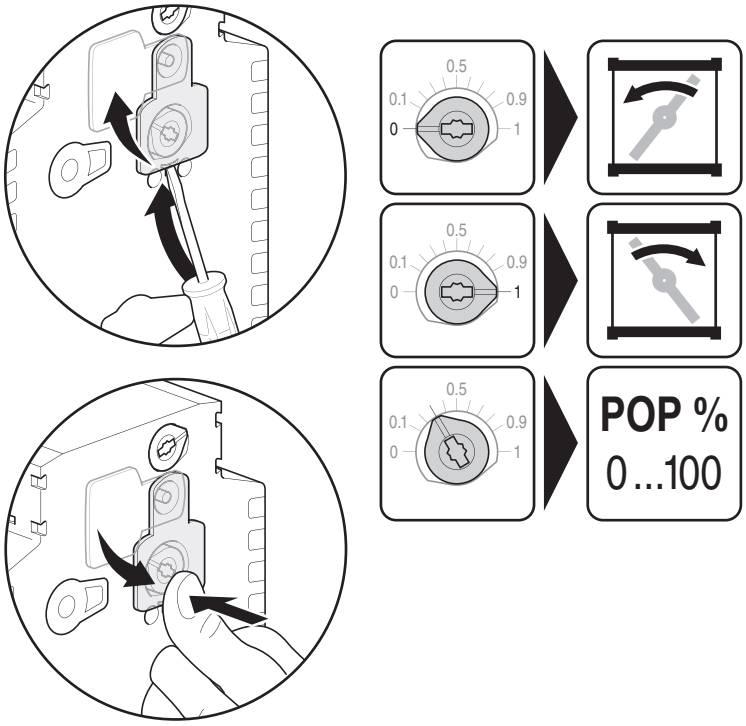

Dimensions [mm]

Spindle length

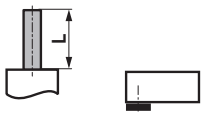	-
	20...58

Clamping range

8...20	8...14	10...20

Dimensional drawings